STRATA PLAN OF PARCEL A AND OF THE PUBLIC HARBOUR OF BURRARD INLET, DL. 185, GP. 1, N.W.D., PLAN LMP 47720

STRATA PLAN BCS 535

DEPOSITED AND REGISTERED IN THE LAND TITLE OFFICE AT NEW WESTMINSTER, B.C.

THIS 2 DAY OF OCT, 2003.

B. Bryan /CP
REGISTRAR

BV 406533 TO BV 406780

B.C.G.S. 92G.025

"CITY OF VANCOUVER"

SCALE 1:750

10 0 10 20 30

ALL DISTANCES ARE IN METRES.

"CASCINA AND DENIA"

590 NICOLA STREET &
499 BROUGHTON STREET
VANCOUVER, B.C.

INTEGRATED SURVEY AREA No. 31
(VANCOUVER) NAD-83 (CSRS)

THIS PLAN SHOWS GROUND-LEVEL MEASURED DISTANCES. PRIOR TO COMPUTATION OF U.T.M. CO-ORDINATES, MULTIPLY BY COMBINED SCALE FACTOR 0.9996026.

SEE SHEET #2 FOR BOUNDARY DIMENSIONS
SEE SHEET #3 FOR BUILDING LOCATION AND DIMENSIONS

LEGEND

GRID BEARINGS ARE DERIVED FROM OBSERVATIONS BETWEEN CONTROL MONUMENTS V-3646 AND V-4201.

- ▲ – DENOTES CONTROL MONUMENT FOUND
- ● – DENOTES STANDARD IRON POST FOUND
- ■ – DENOTES LEAD PLUG FOUND
- □ – DENOTES LEAD PLUG PLACED
- D/R – DENOTES DESTROYED/RESET
- SL. – DENOTES STRATA LOT
- PT. – DENOTES PART
- (C) – DENOTES COMMON PROPERTY
- (E) – DENOTES ELECTRICAL CLOSET BEING COMMON PROPERTY
- (MS) – DENOTES MECHANICAL SPACE BEING COMMON PROPERTY
- O/B – DENOTES OPEN TO BELOW, PART OF SL. BUT EXCLUDED FROM AREA CALCULATION
- S/K (PT. SL.8) – DENOTES SKYLIGHT BEING OPEN TO BELOW, PART OF SL. 8 BUT EXCLUDED FROM AREA CALCULATION. (TYPICAL)
- (RES) – DENOTES LIMITED COMMON PROPERTY FOR THE EXCLUSIVE USE OF SL.'S 2 TO 228 INCLUSIVE
- (COM) – DENOTES LIMITED COMMON PROPERTY FOR THE EXCLUSIVE USE OF SL.'S 239 TO 248 INCLUSIVE
- (RD20) TYPICAL – DENOTES ROOF DECK BEING LIMITED COMMON PROPERTY FOR THE EXCLUSIVE USE OF SL. 20
- (B2) TYPICAL – DENOTES BALCONY BEING LIMITED COMMON PROPERTY FOR THE EXCLUSIVE USE OF SL. 2
- (P2) TYPICAL – DENOTES PATIO BEING LIMITED COMMON PROPERTY FOR THE EXCLUSIVE USE OF SL. 2
- (PS2) TYPICAL – DENOTES PARKING STALL BEING LIMITED COMMON PROPERTY FOR THE EXCLUSIVE USE OF SL. 2
- (L2) TYPICAL – DENOTES LOCKER BEING LIMITED COMMON PROPERTY FOR THE EXCLUSIVE USE OF SL. 2
- N/W 0.10 TYPICAL – DENOTES BOUNDARIES DEFINED BY LEAD PLUGS PLACED. (NO WALLS)
- (GC) – DENOTES GARBAGE CHUTE BEING LIMITED COMMON PROPERTY FOR THE EXCLUSIVE USE OF SL.'S 2 TO 238 INCLUSIVE
- (L) – DENOTES LOCKER BEING LIMITED COMMON PROPERTY FOR THE EXCLUSIVE USE OF SL.'S 2 TO 238 INCLUSIVE
- (PS) – DENOTES PARKING SPACE BEING LIMITED COMMON PROPERTY FOR THE EXCLUSIVE USE OF SL.'S 2 TO 238 INCLUSIVE

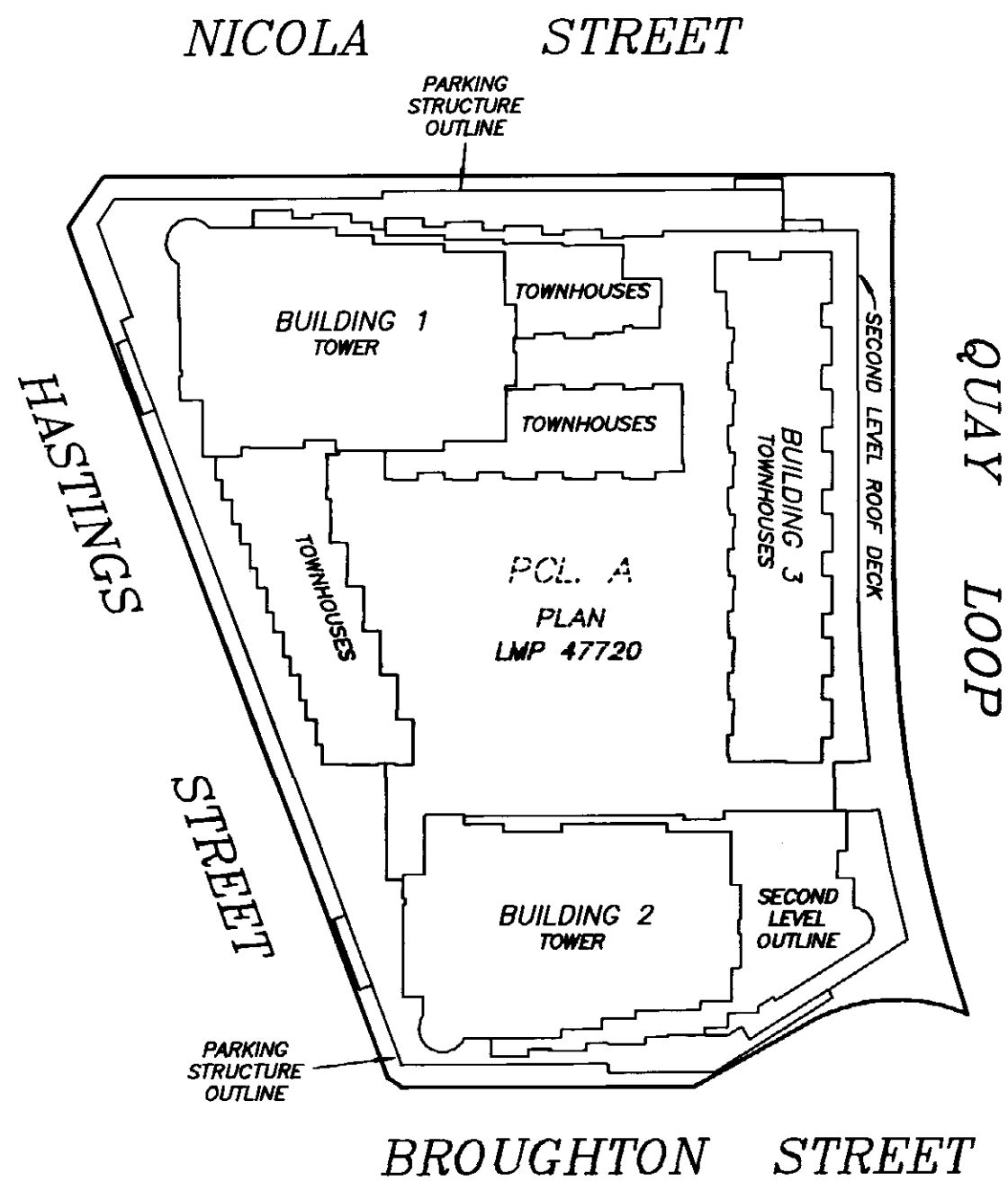

BALCONY AND PATIO AREAS DEFINED AS TO HEIGHT BY THE CENTRE OF THE FLOOR ABOVE OR IT'S EXTENSIONS OR WHERE THERE IS NO FLOOR ABOVE, BY THE AVERAGE HEIGHT OF A STRATA LOT WITHIN THE SAME BUILDING, UNLESS OTHERWISE NOTED.

THIS STRATA PLAN CONTAINS LIMITED COMMON PROPERTY ACCORDING TO SEC. 73 (a)(i) OF THE STRATA PROPERTY ACT.

ALL BOUNDARIES OF STRATA LOTS ARE PARALLEL TO, PERPENDICULAR TO, OR AT A 45 DEGREE DEFLECTION TO STRATA LOT BOUNDARIES UNLESS SHOWN OTHERWISE.

I, J. NEIL BENNETT, A BRITISH COLUMBIA LAND SURVEYOR OF NORTH VANCOUVER IN BRITISH COLUMBIA, CERTIFY THAT I WAS PRESENT AT AND PERSONALLY SUPERINTENDED THE SURVEY REPRESENTED BY THIS PLAN AND THAT THE SURVEY AND PLAN ARE CORRECT. THE FIELD SURVEY WAS COMPLETED ON THE 19th DAY OF SEPTEMBER, 2003.

THE PLAN WAS COMPLETED AND CHECKED, AND THE CHECKLIST FILED UNDER #6200, ON THE 26th DAY OF SEPTEMBER, 2003.

B.C.L.S.

BENNETT & ASSOCIATES
B.C. LAND SURVEYORS
#201-9547 152nd STREET,
SURREY, B.C.
PHONE : 582-0717

DRAWING # 30376-10
FILE # 30376-10_FS
DATE : SEPTEMBER 26, 2003

THIS PLAN LIES WITHIN THE GREATER VANCOUVER REGIONAL DISTRICT

FILED VABCS535 M37352 2004-01-02-13.18.56.751200

PROPERTY DIMENSIONS

STRATA PLAN BCS 535

SCALE 1:500

10 0 10 20

ALL DISTANCES ARE IN METRES.

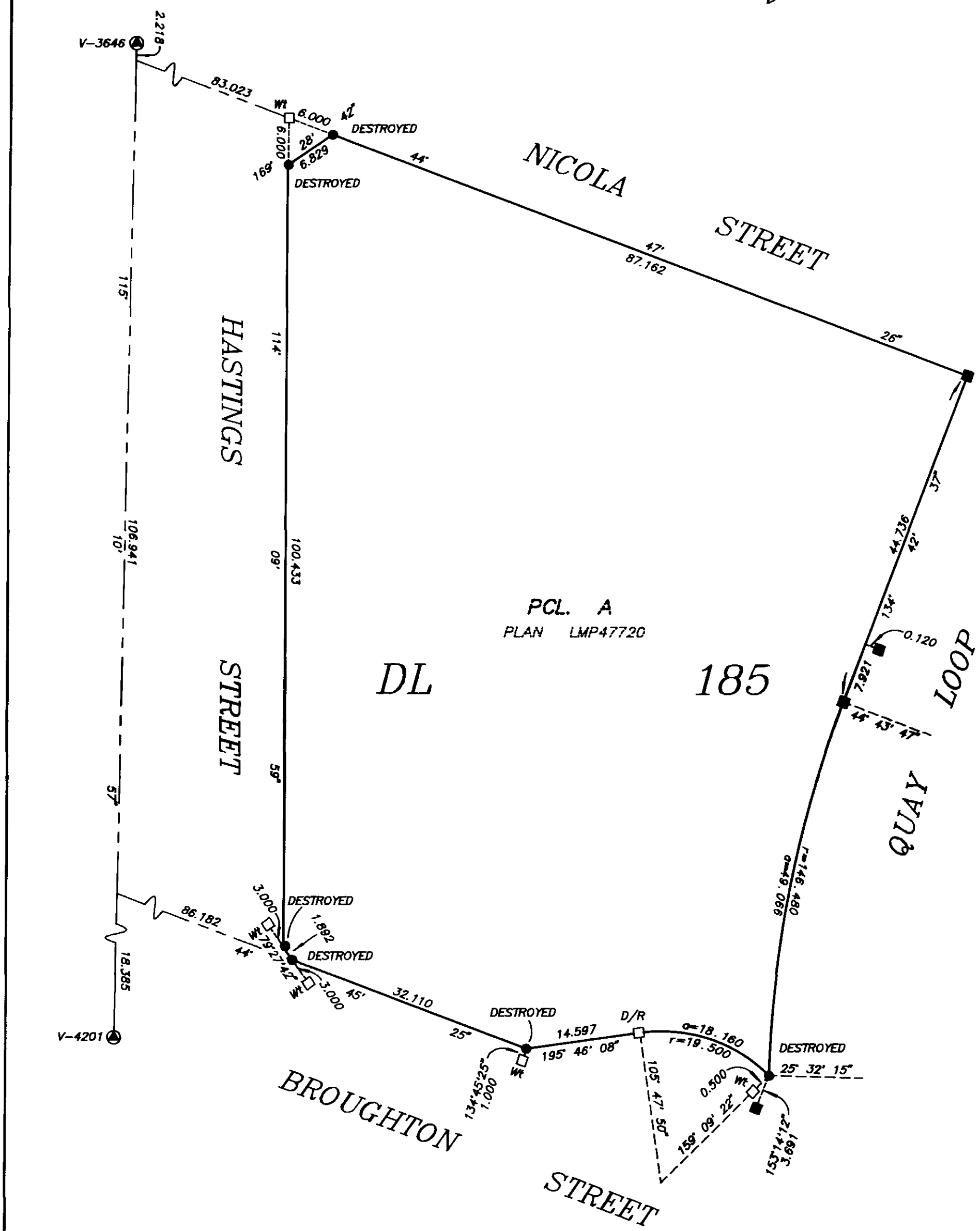

DATE : SEPTEMBER 26, 2003

DRAWING # 30376-10
FILE # 30376-10_Post

FILED VABC535 M37352 2004-01-02-13.18.56.751200

BUILDING LOCATION AND DIMENSIONS

STRATA PLAN BCS 535

SCALE 1:500

10 0 10 20

ALL DISTANCES ARE IN METRES.

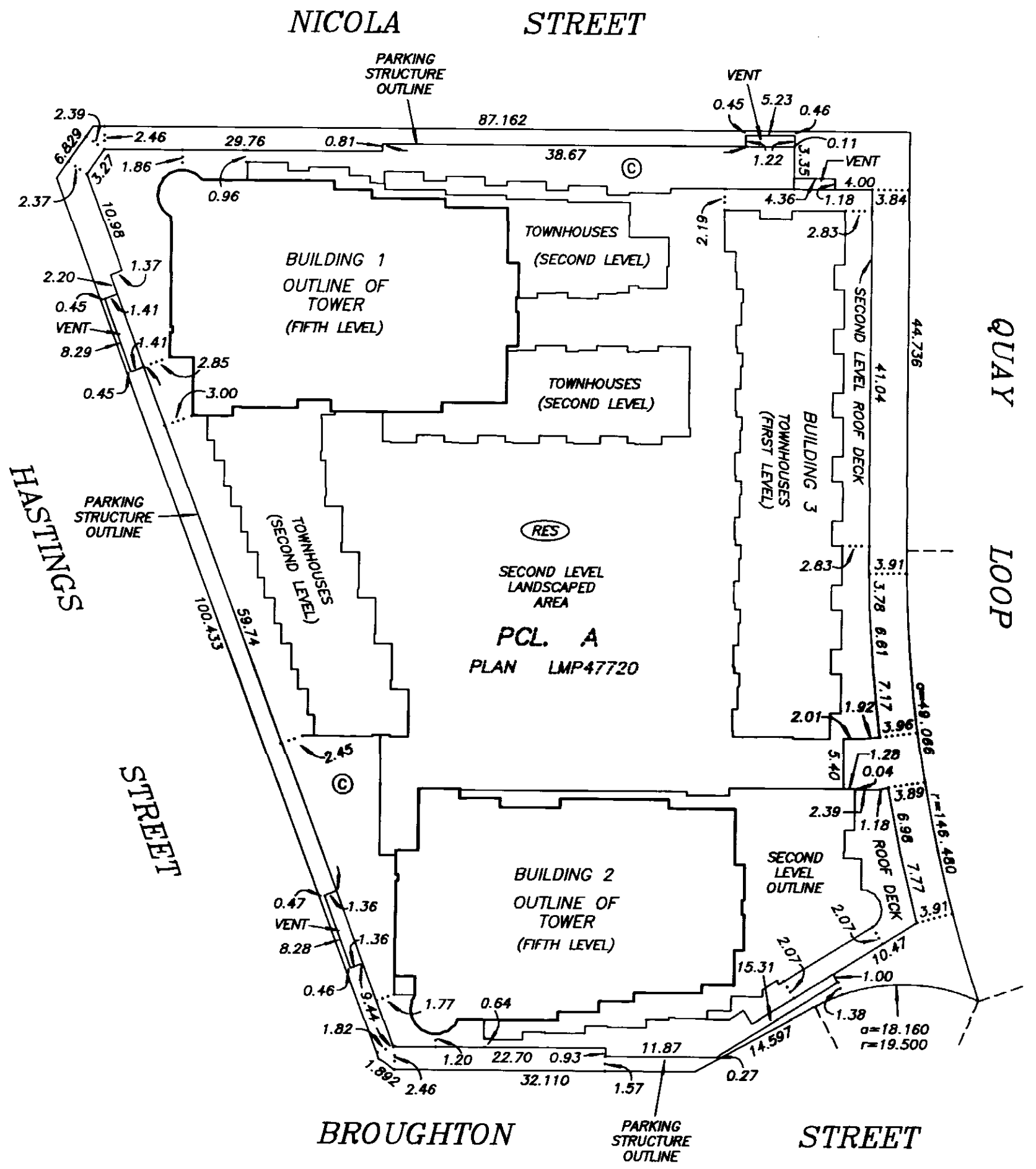

I, J. NEIL BENNETT, A BRITISH COLUMBIA LAND SURVEYOR CERTIFY THAT THE BUILDINGS SHOWN ON THIS STRATA PLAN ARE WITHIN THE THE EXTERNAL BOUNDARIES OF THE LAND THAT IS THE SUBJECT OF THE STRATA PLAN.

DATE: SEPTEMBER 26th, 2003.

DATE: SEPTEMBER 26, 2003

DRAWING # 30376-10
FILE # 30376-10_Ce

FILED VABC535 M37352 2004-01-02-13.18.56.751200

STRATA PLAN BCS 535

OWNER :
HILLSBORO DEVELOPMENTS LTD.
(INC. NO. 448722)

AUTHORIZED SIGNATORY
LILLIAN WONG

AUTHORIZED SIGNATORY

WITNESS AS TO BOTH SIGNATURES
PATRICK JULIAN
lawyer
OCCUPATION OF WITNESS
1900-885 West Georgia
Vancouver, B.C., V6C 3H4
ADDRESS OF WITNESS

MORTGAGEE :
HSBC BANK CANADA

AUTHORIZED SIGNATORY CAROLYN A. SPELL

AUTHORIZED SIGNATORY RICHARD NAILEN

WITNESS AS TO BOTH SIGNATURES
PATRICK JULIAN
lawyer
OCCUPATION OF WITNESS
1900-885 West Georgia
Vancouver, B.C. V6C 3H4
ADDRESS OF WITNESS

I, J. NEIL BENNETT, A BRITISH COLUMBIA LAND SURVEYOR OF NORTH VANCOUVER IN BRITISH COLUMBIA, HEREBY CERTIFY THAT THE BUILDING INCLUDED IN THIS STRATA PLAN HAS NOT, AS OF THE 19th DAY OF SEPTEMBER , 2003, BEEN PREVIOUSLY OCCUPIED.

B.C.L.S.

THE CITY OF VANCOUVER, REGISTERED OWNER OF COVENANTS BJ83812 AND BL26986 HEREBY CONSENTS TO THE DEPOSIT OF THIS PLAN.

JS
AUTHORIZED SIGNATORY
GRAHAM JOHNSEN

AUTHORIZED SIGNATORY

DATE : SEPTEMBER 26, 2003

DRAWING # 30376-10
FILE # 30376-10_Sig

FILED VABCS535 M37352 2004-01-02-13.18.56.751200

SECTION A–A'

SCALE 1:250

ALL DISTANCES ARE IN METRES.

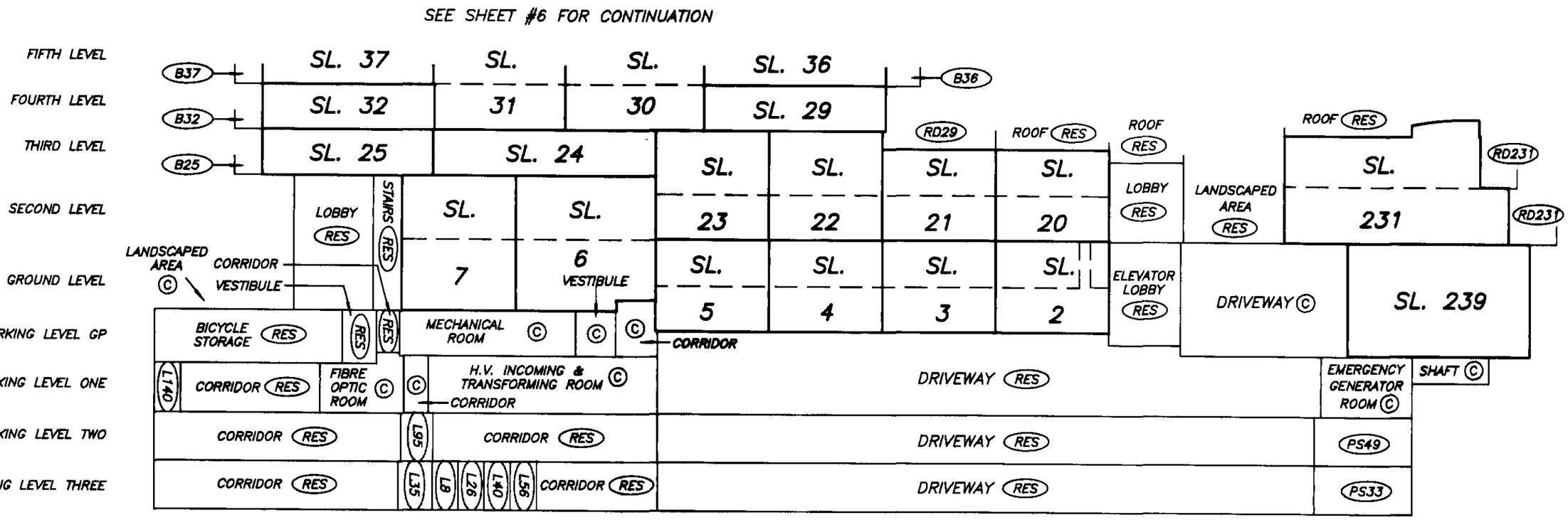

STRATA PLAN BCS 535

DRAWING # 30376-10_SA
FILE # 30376-10

DATE : SEPTEMBER 26, 2003

SECTION A–A'

SCALE 1:125

2 0 2 4
ALL DISTANCES ARE IN METRES.

SEE SHEET #7 FOR CONTINUATION

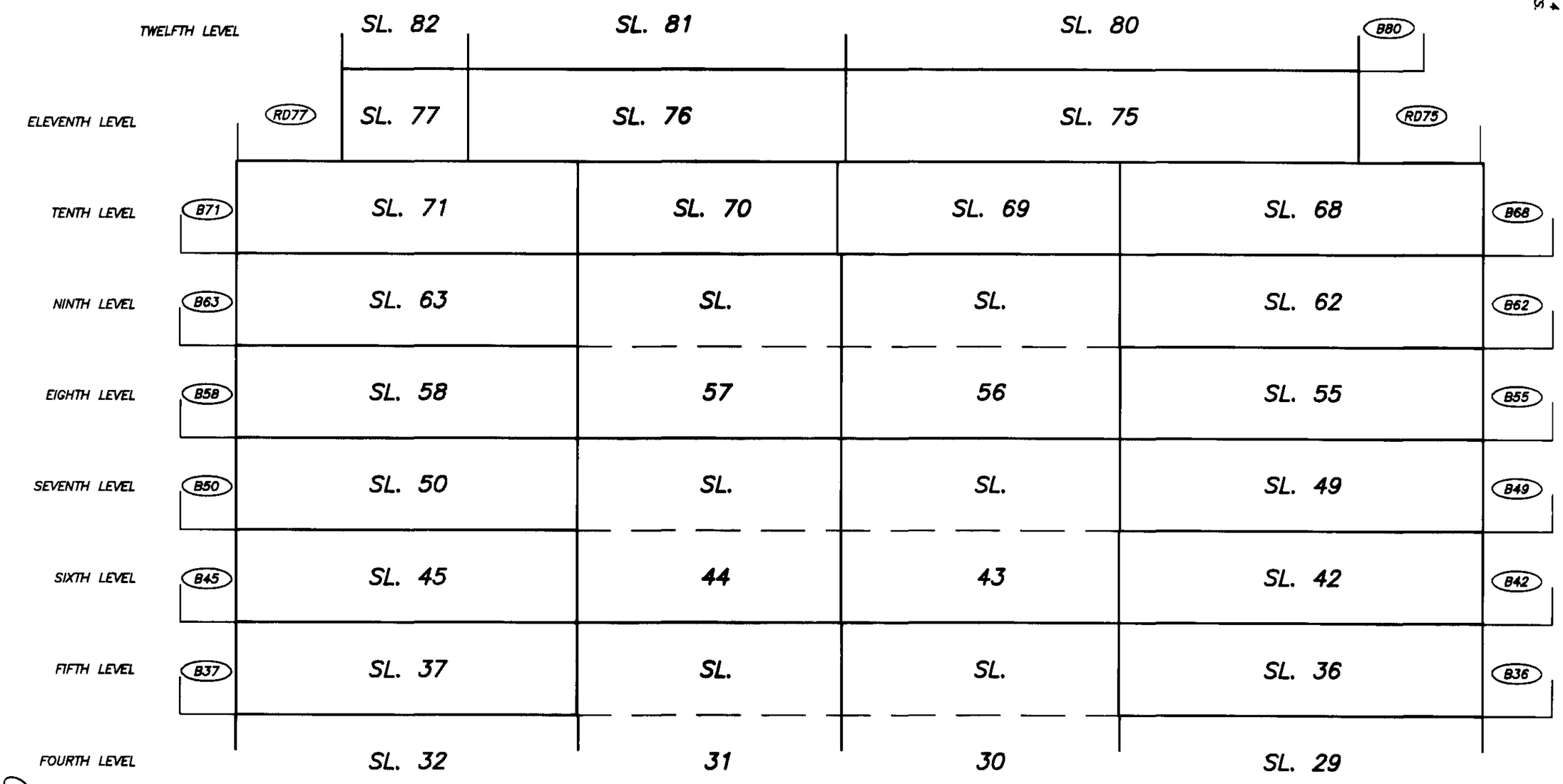

SEE SHEET #5 FOR CONTINUATION

STRATA PLAN BCS 535

DRAWING # 30376–10_SA
FILE # 30376–10

DATE : SEPTEMBER 26, 2003

SECTION A–A'

SCALE 1:125

2 0 2 4

ALL DISTANCES ARE IN METRES.

SEE SHEET #8 FOR CONTINUATION

NINETEENTH LEVEL	SL. 117	SL. 116	SL. 115	B115
EIGHTEENTH LEVEL	SL. 112	SL. 111	SL. 110	B110
SEVENTEENTH LEVEL	SL. 107	SL. 106	SL. 105	B105
SIXTEENTH LEVEL	SL. 102	SL. 101	SL. 100	B100
FIFTEENTH LEVEL	SL. 97	SL. 96	SL. 95	B95
FOURTEENTH LEVEL	SL. 92	SL. 91	SL. 90	B90
THIRTEENTH LEVEL	SL. 87	SL. 86	SL. 85	B85
TWELFTH LEVEL	SL. 82	SL. 81	SL. 80	B80
ELEVENTH LEVEL	SL. 77	SL. 76	SL. 75	

SEE SHEET #6 FOR CONTINUATION

DRAWING # 30376-10_SA
FILE # 30376-10

DATE : SEPTEMBER 26, 2003

STRATA PLAN BCS 535

SECTION A–A'

SCALE 1:125

2 0 2 4

ALL DISTANCES ARE IN METRES.

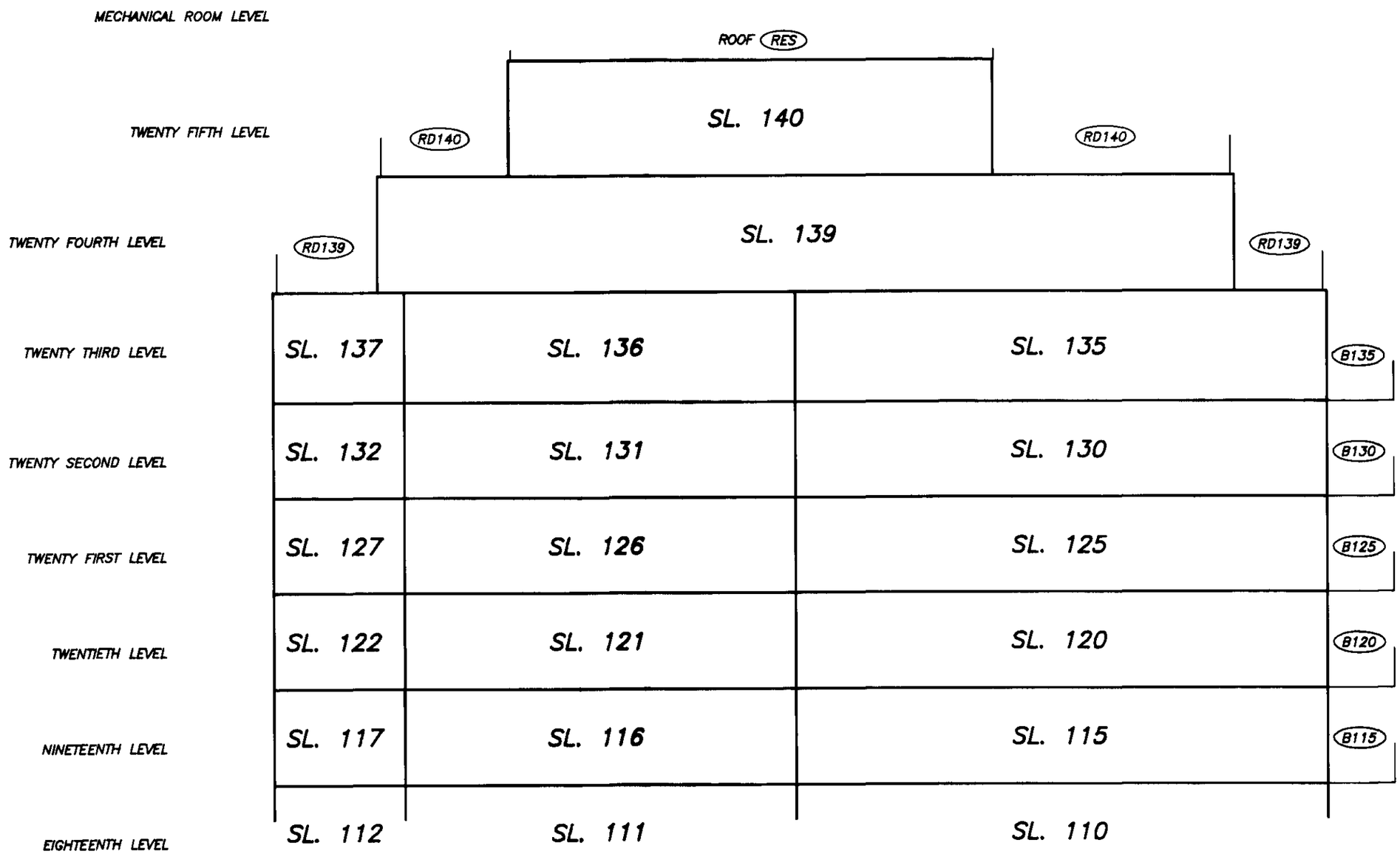

SEE SHEET #7 FOR CONTINUATION

DRAWING # 30376-10_SA
FILE # 30376-10

DATE : SEPTEMBER 26, 2003

STRATA PLAN BCS 535

SECTION B–B'

SCALE 1:250

ALL DISTANCES ARE IN METRES.

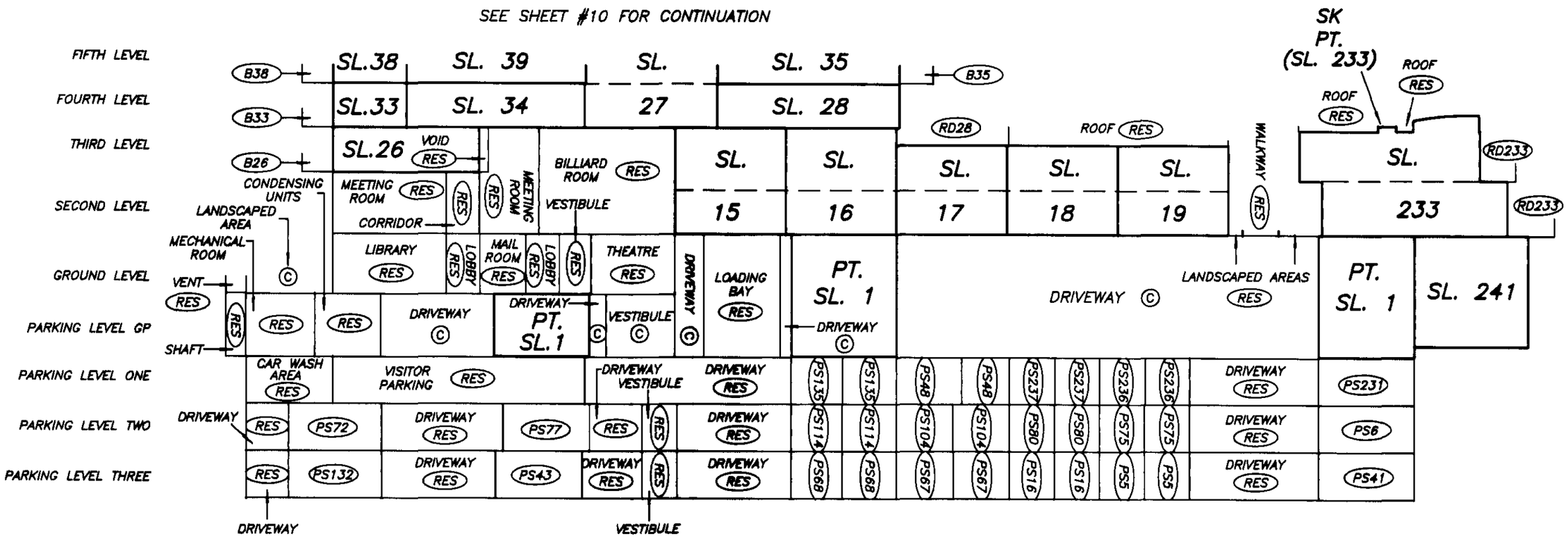

STRATA PLAN BCS 535

DRAWING # 30376-10_SB
FILE # 30376-10

DATE: SEPTEMBER 26, 2003

SECTION B–B'

SCALE 1:125

2 0 2 4

ALL DISTANCES ARE IN METRES.

SEE SHEET #11 FOR CONTINUATION

TWELFTH LEVEL	B82	SL. 82	SL. 83	SL. 79		B79
ELEVENTH LEVEL	B77	SL. 77	SL. 78	SL. 74		RD74
TENTH LEVEL	B72	SL. 72	SL. 73	SL. 66	SL. 67	B67
NINTH LEVEL	B64	SL. 64	SL. 65	SL.	SL. 61	B61
EIGHTH LEVEL	B59	SL. 59	SL. 60	53	SL. 54	B54
SEVENTH LEVEL	B51	SL. 51	SL. 52	SL.	SL. 48	B48
SIXTH LEVEL	B46	SL. 46	SL. 47	40	SL. 41	B41
FIFTH LEVEL	B38	SL. 38	SL. 39	SL.	SL. 35	B35
FOURTH LEVEL		SL. 33	SL. 34	27	SL. 28	

SEE SHEET #9 FOR CONTINUATION

STRATA PLAN BCS 535

DRAWING # 30376-10_SB
FILE # 30376-10

DATE : SEPTEMBER 26, 2003

SECTION B–B'

SCALE 1:125

2 0 2 4
ALL DISTANCES ARE IN METRES.

SEE SHEET #12 FOR CONTINUATION

NINETEENTH LEVEL	B117	SL. 117	SL. 118	SL. 114	B114
EIGHTEENTH LEVEL	B112	SL. 112	SL. 113	SL. 109	B109
SEVENTEENTH LEVEL	B107	SL. 107	SL. 108	SL. 104	B104
SIXTEENTH LEVEL	B102	SL. 102	SL. 103	SL. 99	B99
FIFTEENTH LEVEL	B97	SL. 97	SL. 98	SL. 94	B94
FOURTEENTH LEVEL	B92	SL. 92	SL. 93	SL. 89	B89
THIRTEENTH LEVEL	B87	SL. 87	SL. 88	SL. 84	B84
TWELFTH LEVEL	B82	SL. 82	SL. 83	SL. 79	B79
ELEVENTH LEVEL		SL. 77	SL. 78	SL. 74	

SEE SHEET #10 FOR CONTINUATION

DRAWING # 30376-10_SB
FILE # 30376-10

DATE : SEPTEMBER 26, 2003

STRATA PLAN BCS 535

SECTION B–B'

SCALE 1:125

2 0 2 4

ALL DISTANCES ARE IN METRES.

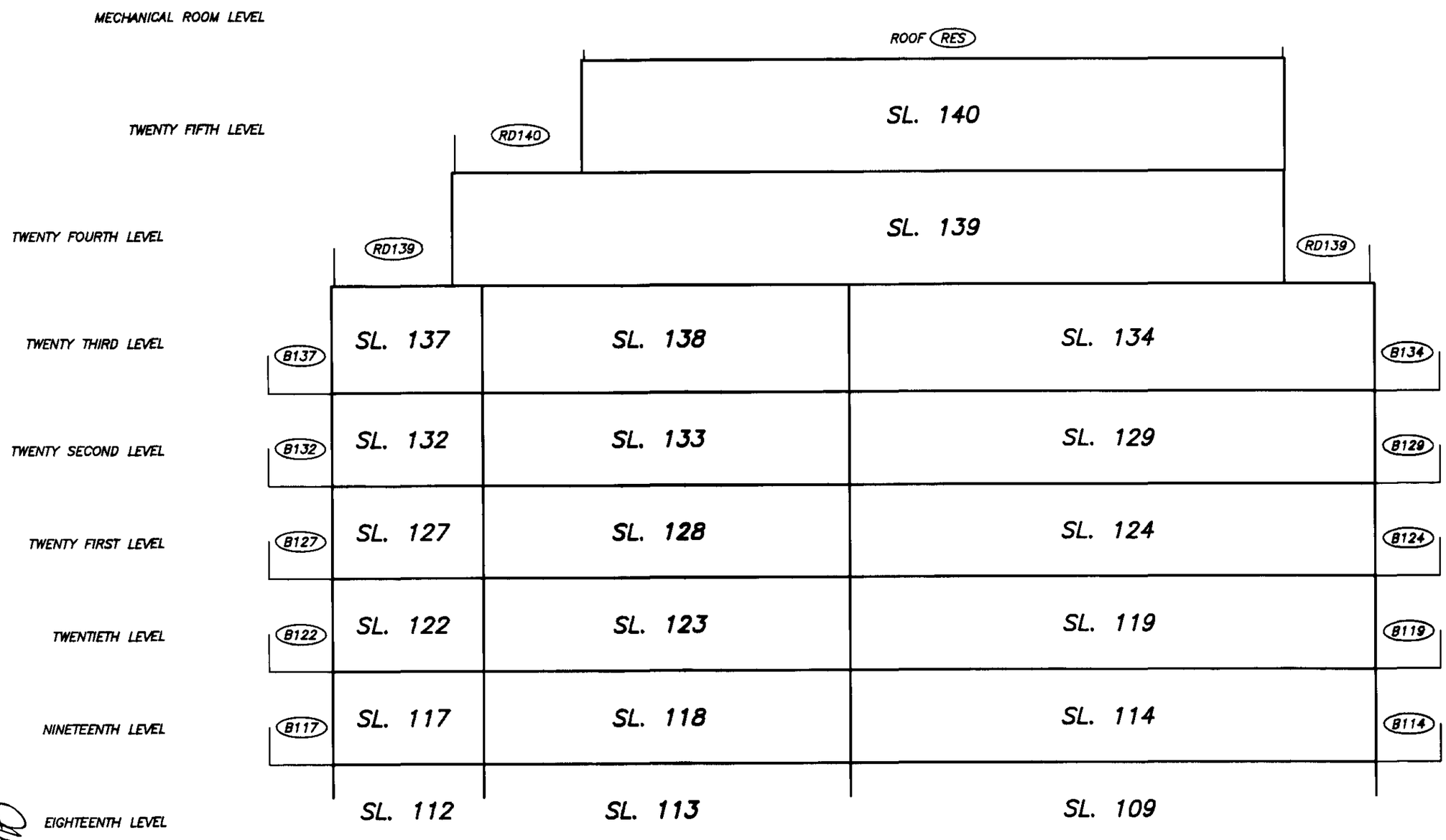

SEE SHEET #11 FOR CONTINUATION

DRAWING # 30376-10_SB
FILE # 30376-10

DATE : SEPTEMBER 26, 2003

STRATA PLAN BCS 535

SECTION C–C'
(TOWNHOUSES ONLY)

SCALE 1:250

4 0 4 8
ALL DISTANCES ARE IN METRES.

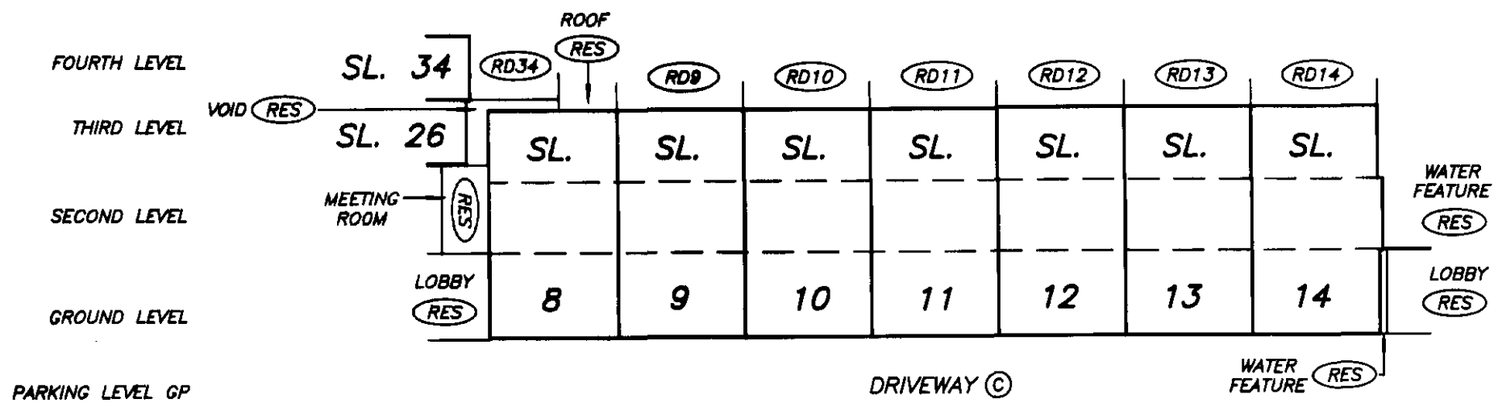

STRATA PLAN BCS 535

DRAWING # 30376–10_SC
FILE # 30376–10

DATE : SEPTEMBER 26, 2003

SECTION D–D'

SCALE 1:250

ALL DISTANCES ARE IN METRES.

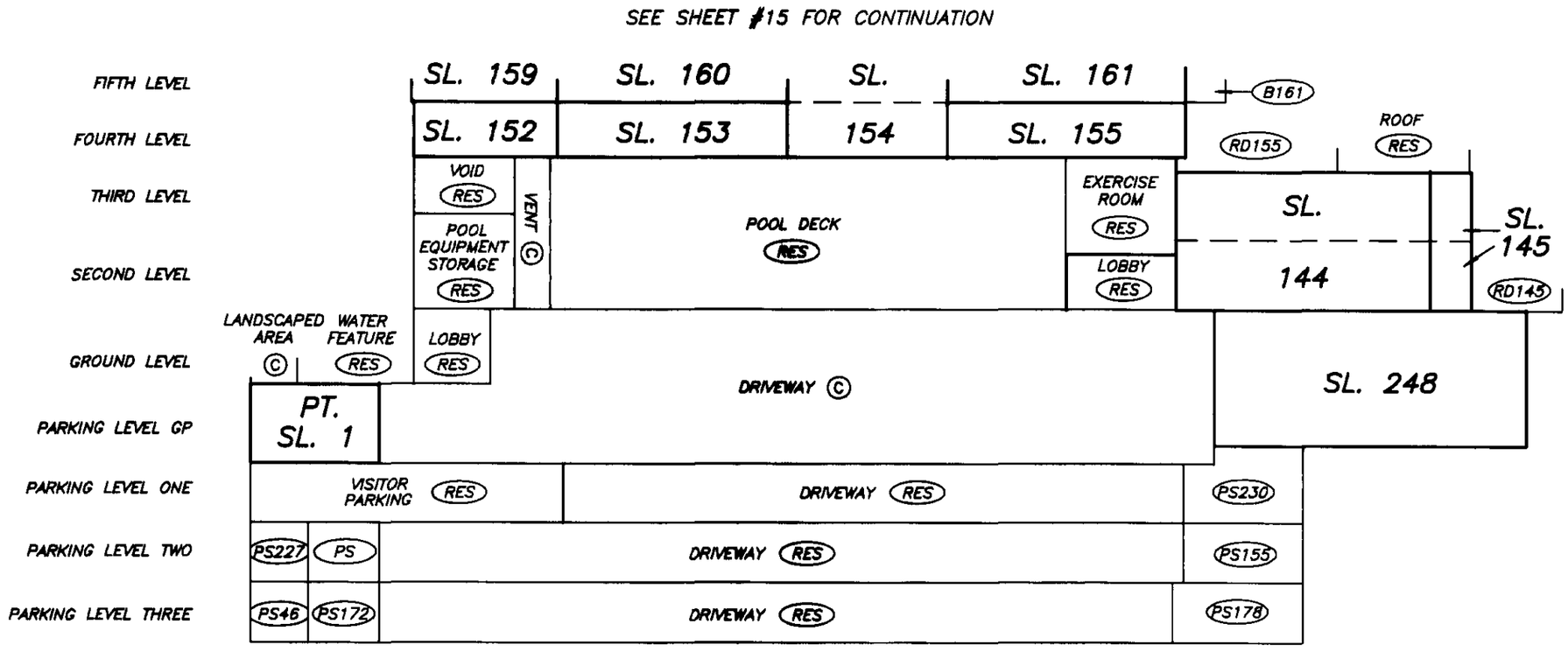

DRAWING # 30376-10_SD
FILE # 30376-10

DATE : SEPTEMBER 26, 2003

STRATA PLAN BCS 535

SECTION D–D'

SCALE 1:125

2 0 2 4

ALL DISTANCES ARE IN METRES.

SEE SHEET #16 FOR CONTINUATION

FOURTEENTH LEVEL	SL. 207	SL. 208			B208
THIRTEENTH LEVEL	SL. 203	SL. 204			B204
TWELFTH LEVEL	SL. 199	SL. 200			B200
ELEVENTH LEVEL	SL. 195	SL. 196			RD196
TENTH LEVEL	SL. 188	SL. 189	SL. 190	SL. 191	B191
NINTH LEVEL	SL. 183	SL. 184	SL.	SL. 185	B185
EIGHTH LEVEL	SL. 176	SL. 177	178	SL. 179	B179
SEVENTH LEVEL	SL. 171	SL. 172	SL.	SL. 173	B173
SIXTH LEVEL	SL. 164	SL. 165	166	SL. 167	B167
FIFTH LEVEL	SL. 159	SL. 160	SL.	SL. 161	B161
FOURTH LEVEL	SL. 152	SL. 153	154	SL. 155	

SEE SHEET #14 FOR CONTINUATION

STRATA PLAN BCS 535

DRAWING # 30376-10_SD
FILE # 30376-10

DATE : SEPTEMBER 26, 2003

DRAWING # 30376-10_SD
FILE # 30376-10

SECTION D-D'

SCALE 1:125

2 0 2 4
ALL DISTANCES ARE IN METRES.

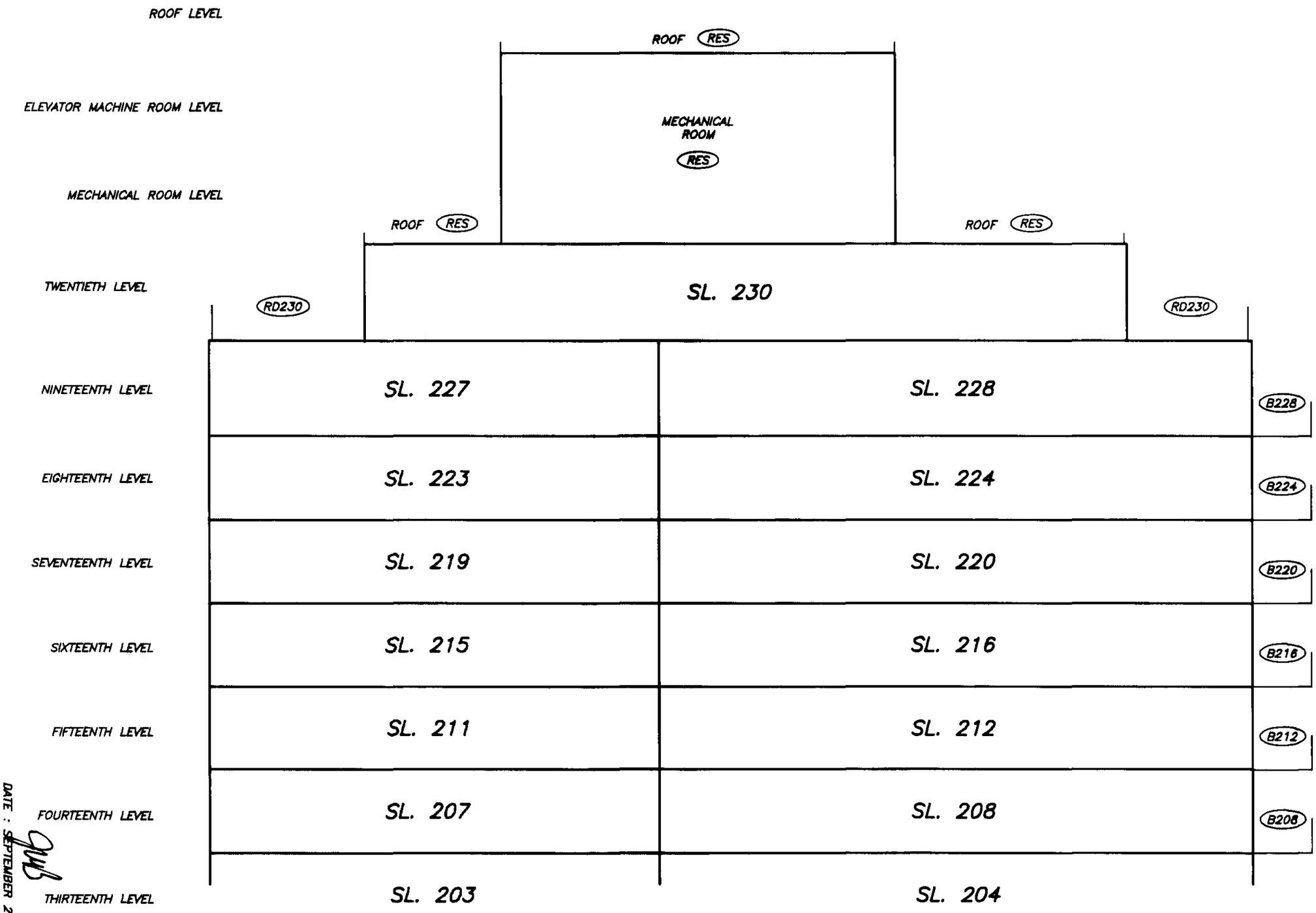

SEE SHEET #15 FOR CONTINUATION

DATE : SEPTEMBER 26, 2003

STRATA PLAN BCS 535

SECTION E–E'

SCALE 1:250

ALL DISTANCES ARE IN METRES.

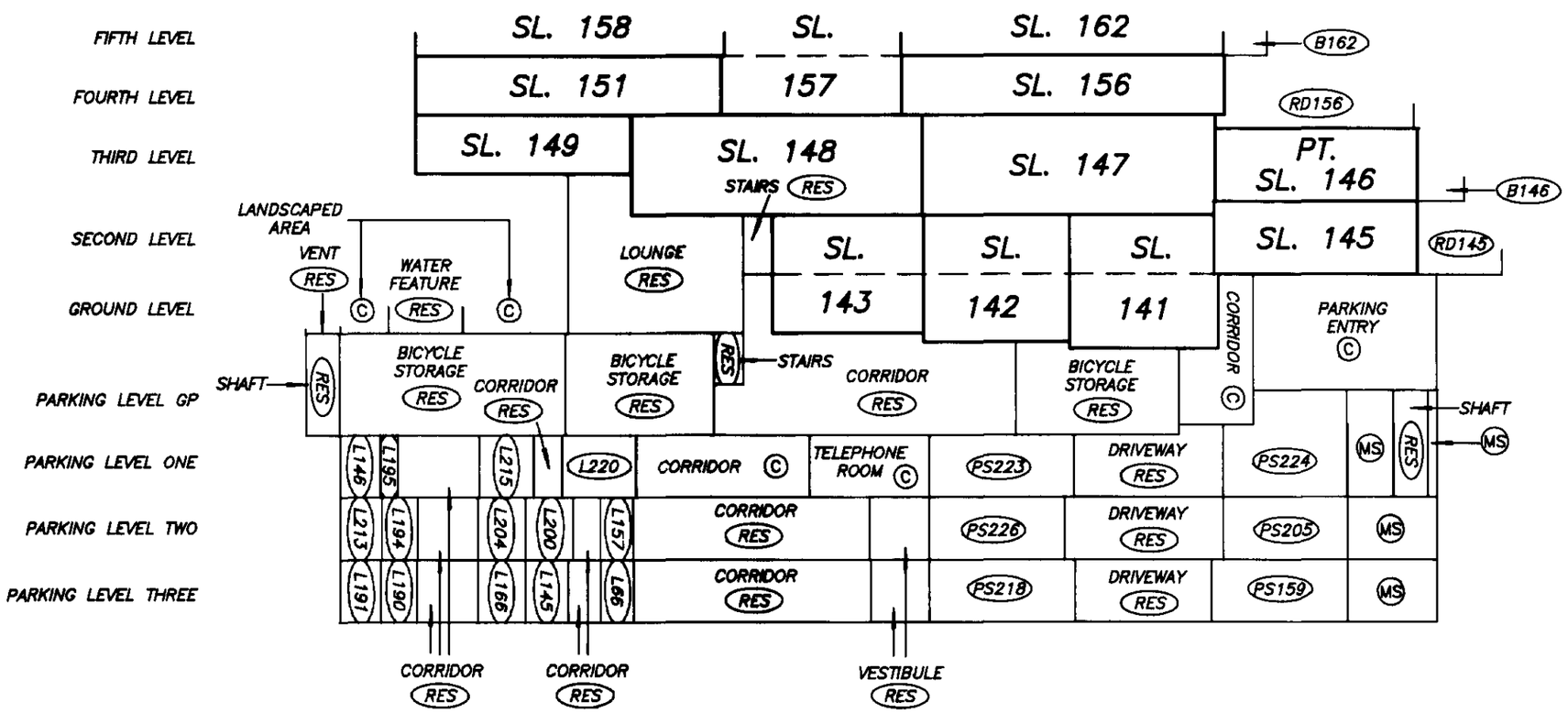

DRAWING # 30376-10_SE
FILE # 30376-10

DATE: SEPTEMBER 26, 2003

STRATA PLAN BCS 535

DRAWING # 30376-10_SE
FILE # 30376-10

SECTION E-E'

SCALE 1:125

2 0 2 4
ALL DISTANCES ARE IN METRES.

SEE SHEET #19 FOR CONTINUATION

FOURTEENTH LEVEL		SL. 206	SL. 209	B209
THIRTEENTH LEVEL		SL. 202	SL. 205	B205
TWELFTH LEVEL		SL. 198	SL. 201	B201
ELEVENTH LEVEL	RD194	SL. 194	SL. 197	RD197
TENTH LEVEL	SL. 187	SL. 193	SL. 192	B192
NINTH LEVEL	SL. 182	SL.	SL. 186	B186
EIGHTH LEVEL	SL. 175	181	SL. 180	B180
SEVENTH LEVEL	SL. 170	SL.	SL. 174	B174
SIXTH LEVEL	SL. 163	169	SL. 168	B168
FIFTH LEVEL	SL. 158	SL.	SL. 162	B162
FOURTH LEVEL	SL. 151	157	SL. 156	

SEE SHEET #17 FOR CONTINUATION

DATE : SEPTEMBER 26, 2003

STRATA PLAN BCS 535

SECTION E-E'

SCALE 1:125

2 0 2 4

ALL DISTANCES ARE IN METRES.

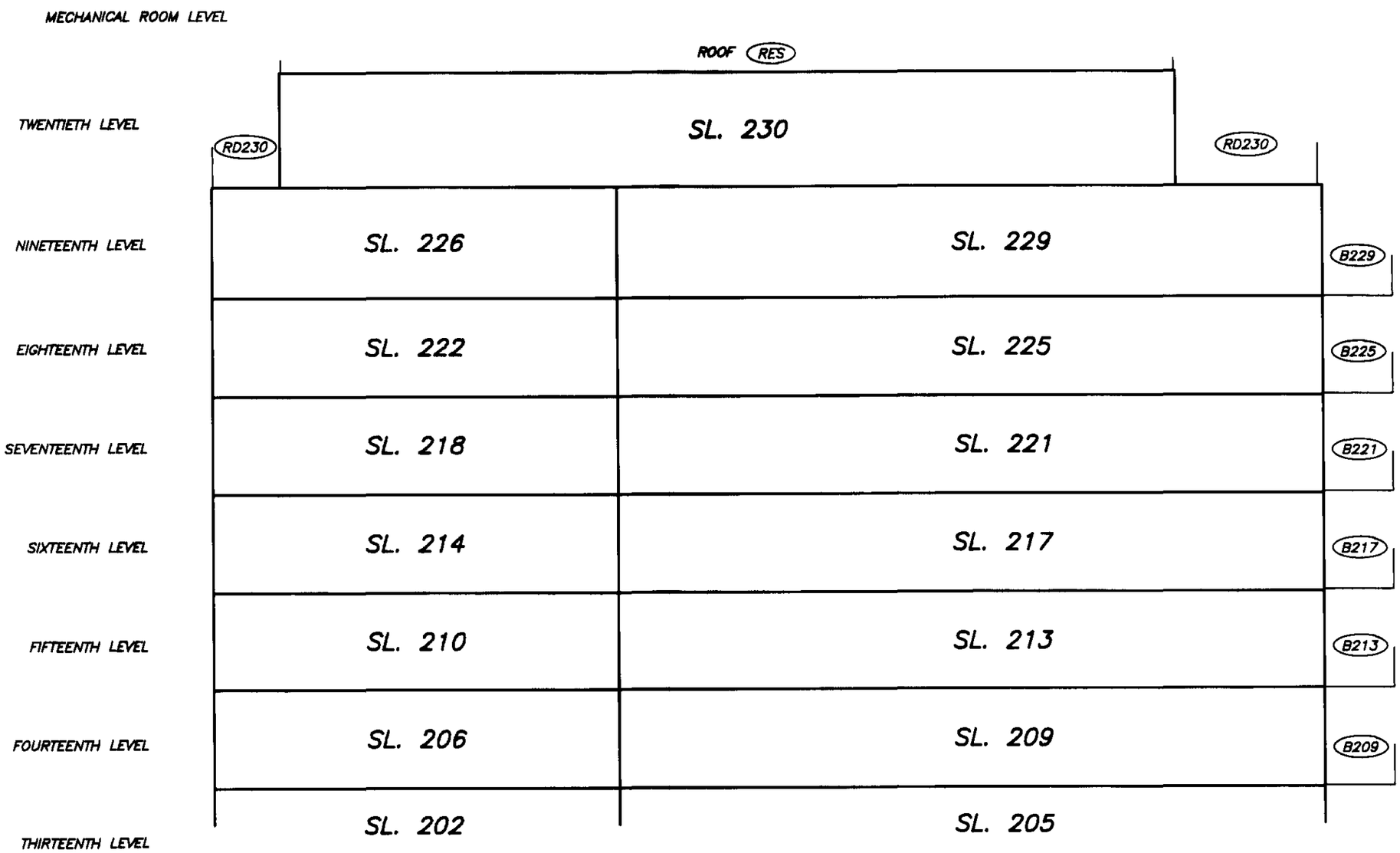

SEE SHEET #18 FOR CONTINUATION

STRATA PLAN BCS 535

DRAWING # 30376-10_SE
FILE # 30376-10

DATE : SEPTEMBER 26, 2003

SECTIONS

SCALE 1:250

ALL DISTANCES ARE IN METRES.

4 0 4 8

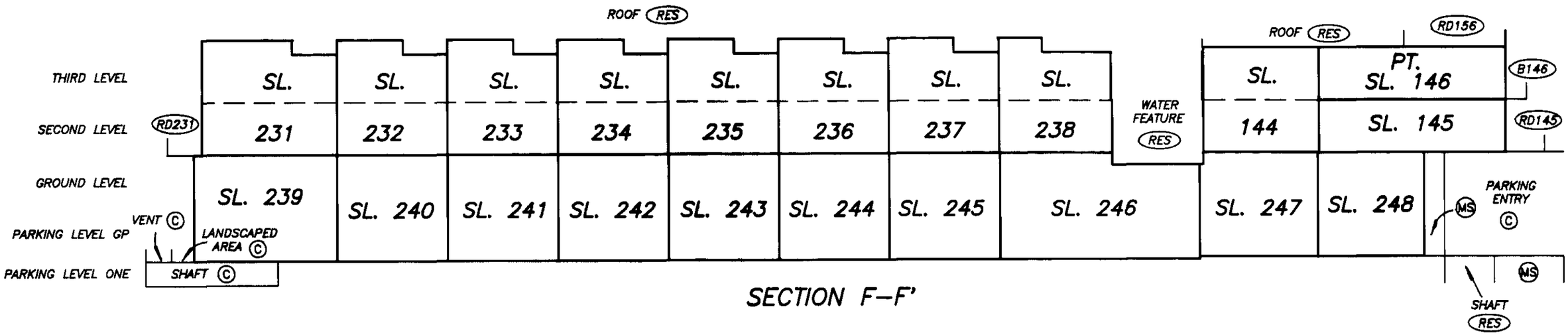

SECTION F–F'

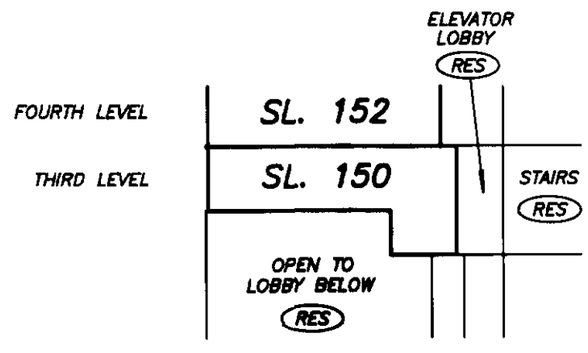

SECTION G–G'

STRATA PLAN BCS 535

DRAWING # 30376-10_SF
FILE # 30376-10

DATE : SEPTEMBER 26, 2003

PARKING LEVEL THREE
WEST HALF

STRATA PLAN BCS 535

SCALE 1:250

5 0 5 10

ALL DISTANCES ARE IN METRES.

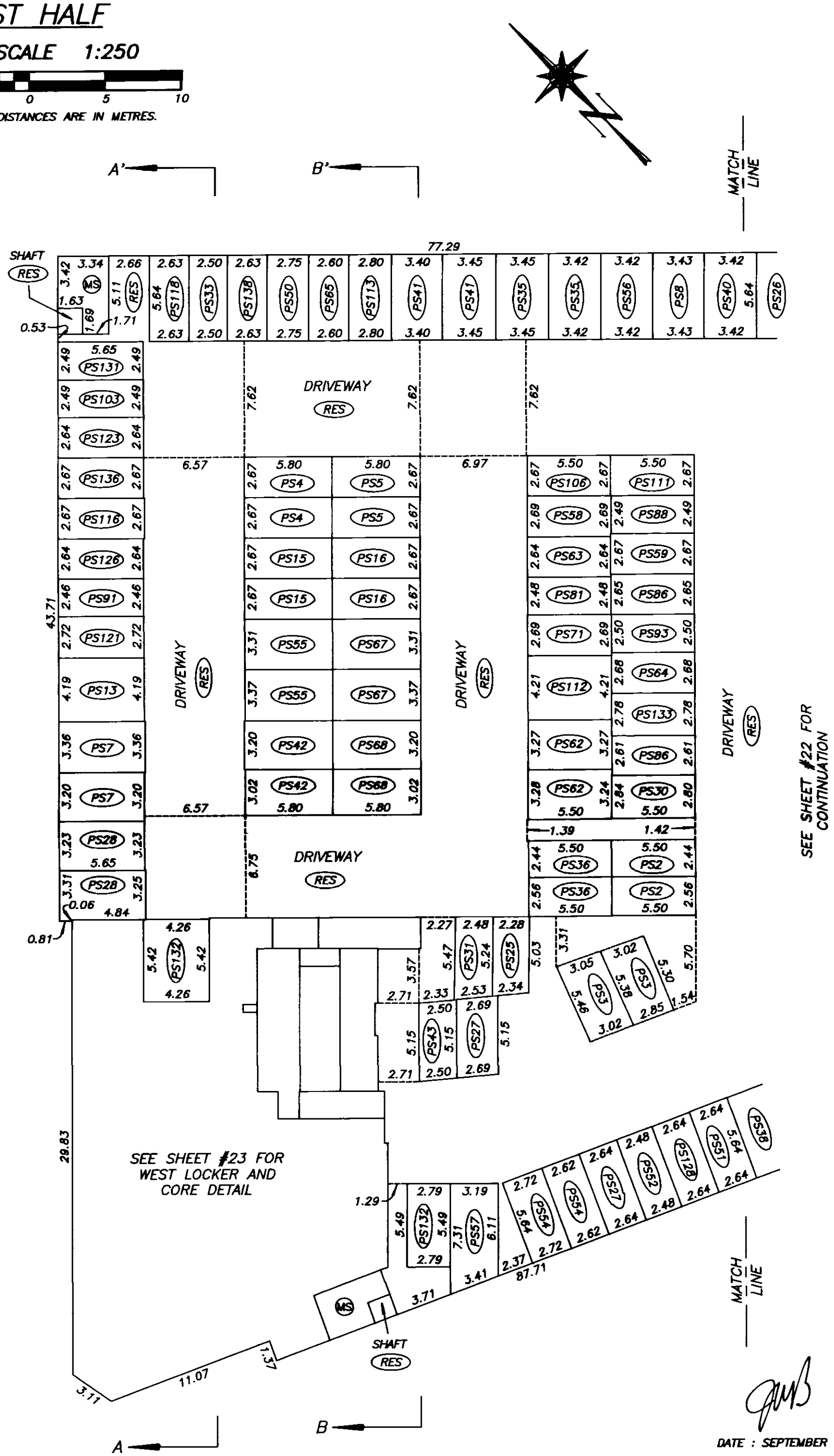

DATE : SEPTEMBER 26, 2003

DRAWING # 30376-10
FILE # 30376-10_P3

FILED VABCS535 M37352 2004-01-02-13.18.56.751200

PARKING LEVEL THREE
EAST HALF

STRATA PLAN BCS 535

SCALE 1:250

5 0 5 10

ALL DISTANCES ARE IN METRES.

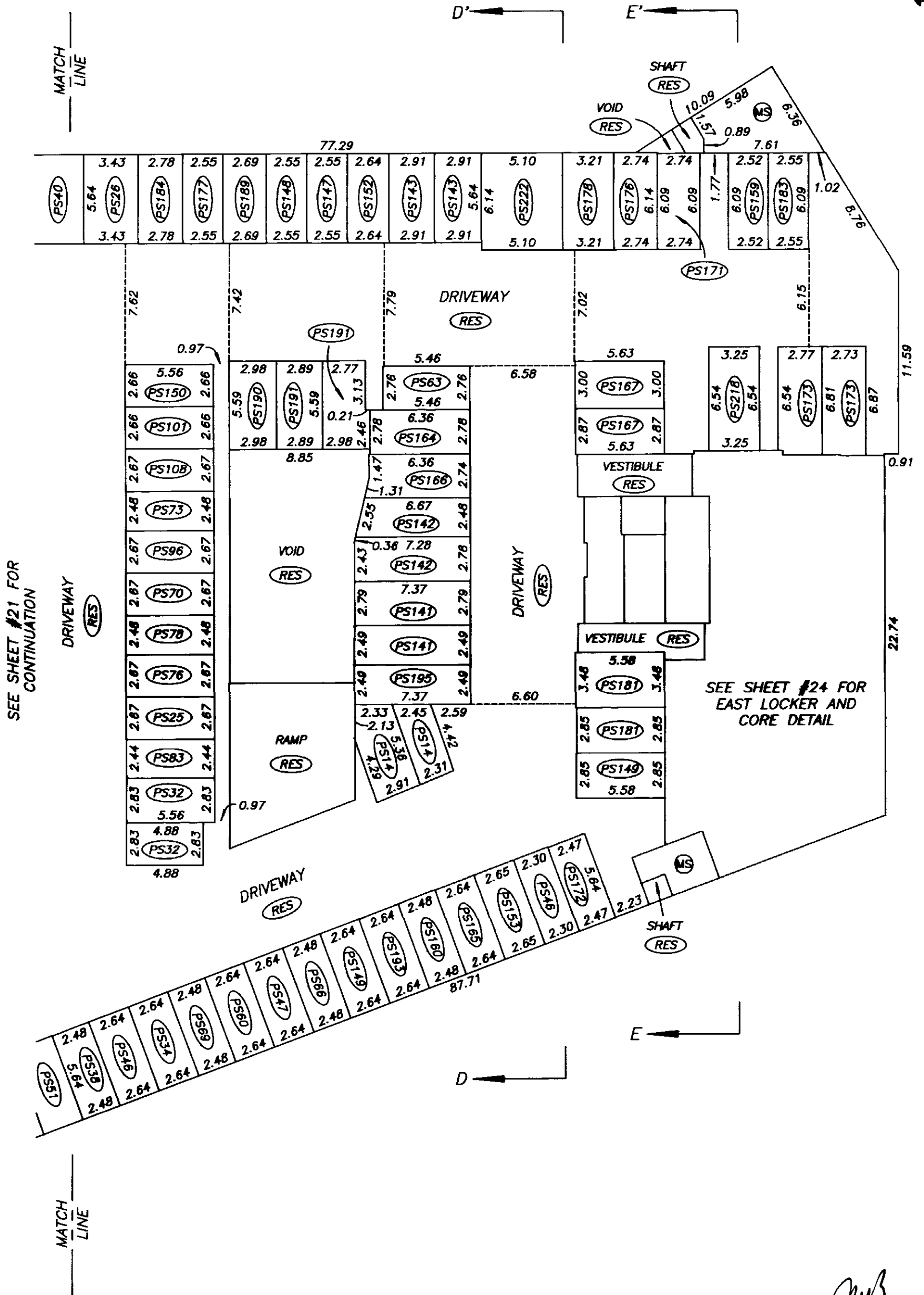

DATE : SEPTEMBER 26, 2003

DRAWING # 30376-10
FILE # 30376-10_P3

FILED VABCS535 M37352 2004-01-02-13.18.56.751200

PARKING LEVEL THREE
WEST LOCKER AND CORE DETAIL

STRATA PLAN BCS 535

SCALE 1:100

2 0 2 4

ALL DISTANCES ARE IN METRES.

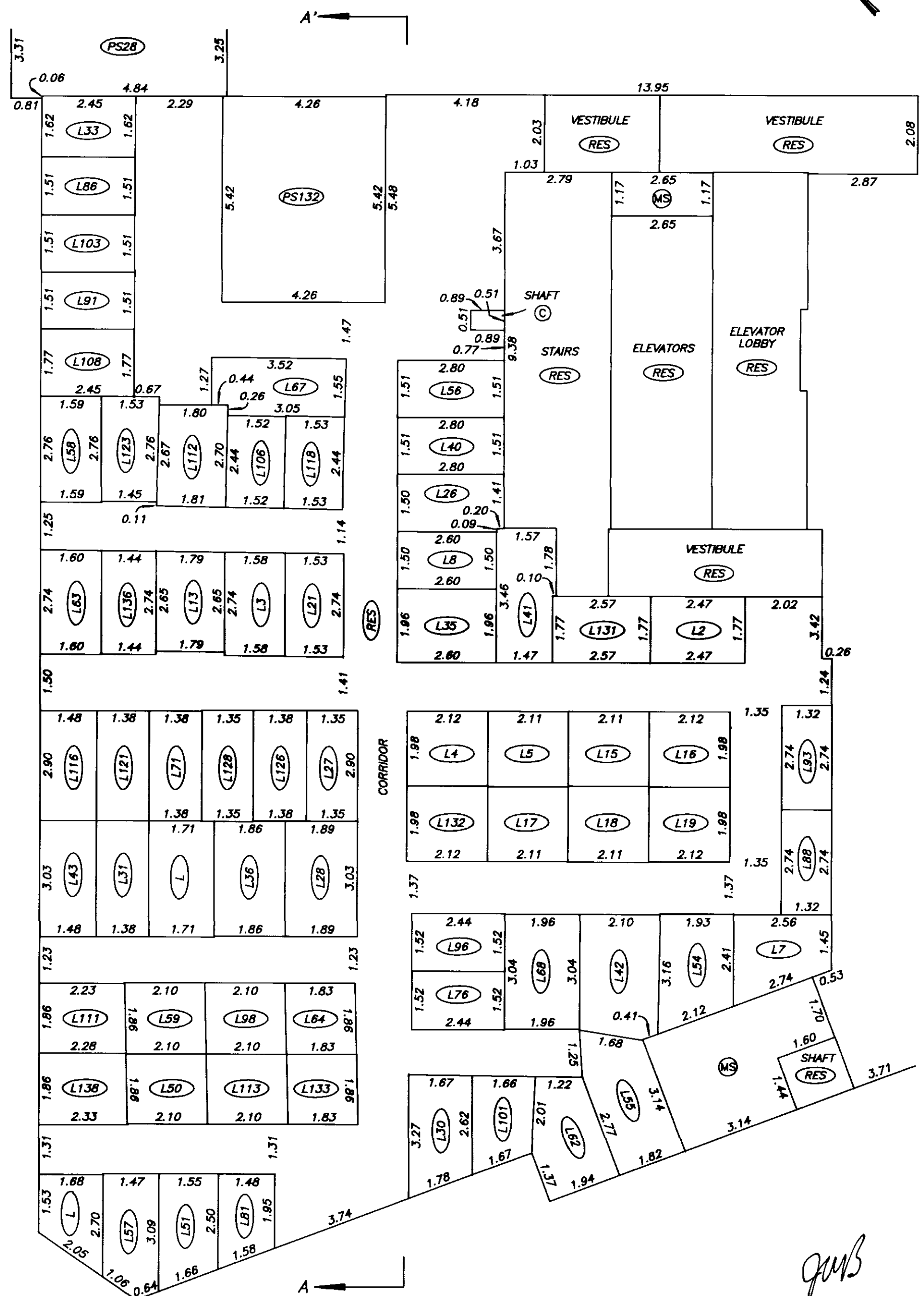

DATE : SEPTEMBER 26, 2003

DRAWING # 30376-10
FILE # 30376-10_P3

FILED VABCS535 M37352 2004-01-02-13.18.56.751200

PARKING LEVEL THREE
EAST LOCKER AND CORE DETAIL

STRATA PLAN BCS 535

SCALE 1:100

2 0 2 4

ALL DISTANCES ARE IN METRES.

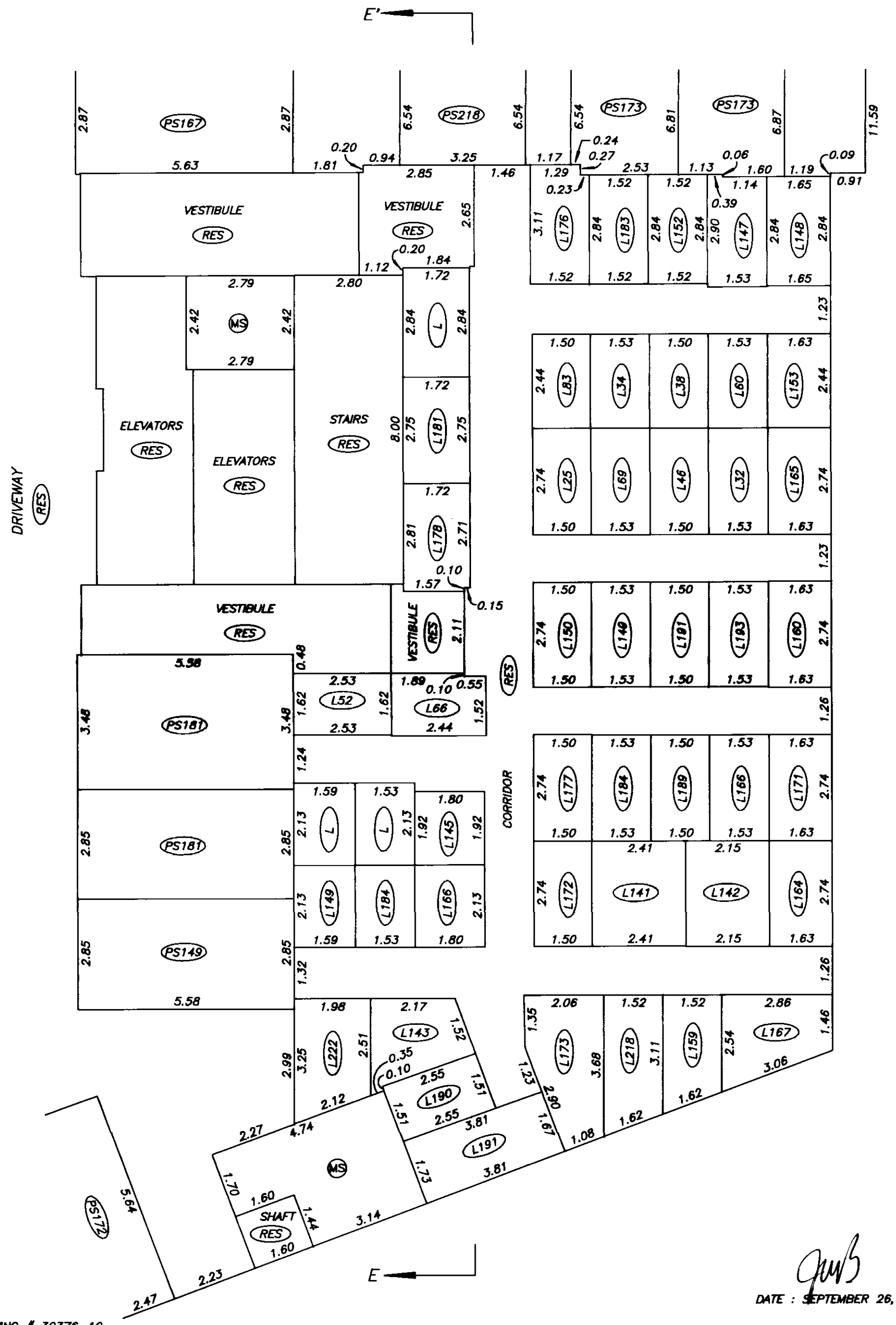

DATE : SEPTEMBER 26, 2003

DRAWING # 30376-10
FILE # 30376-10_P3

FILED VABC535 M37352 2004-01-02-13.18.56.751200

PARKING LEVEL TWO
WEST HALF

STRATA PLAN BCS 535

SCALE 1:250

5 0 5 10

ALL DISTANCES ARE IN METRES.

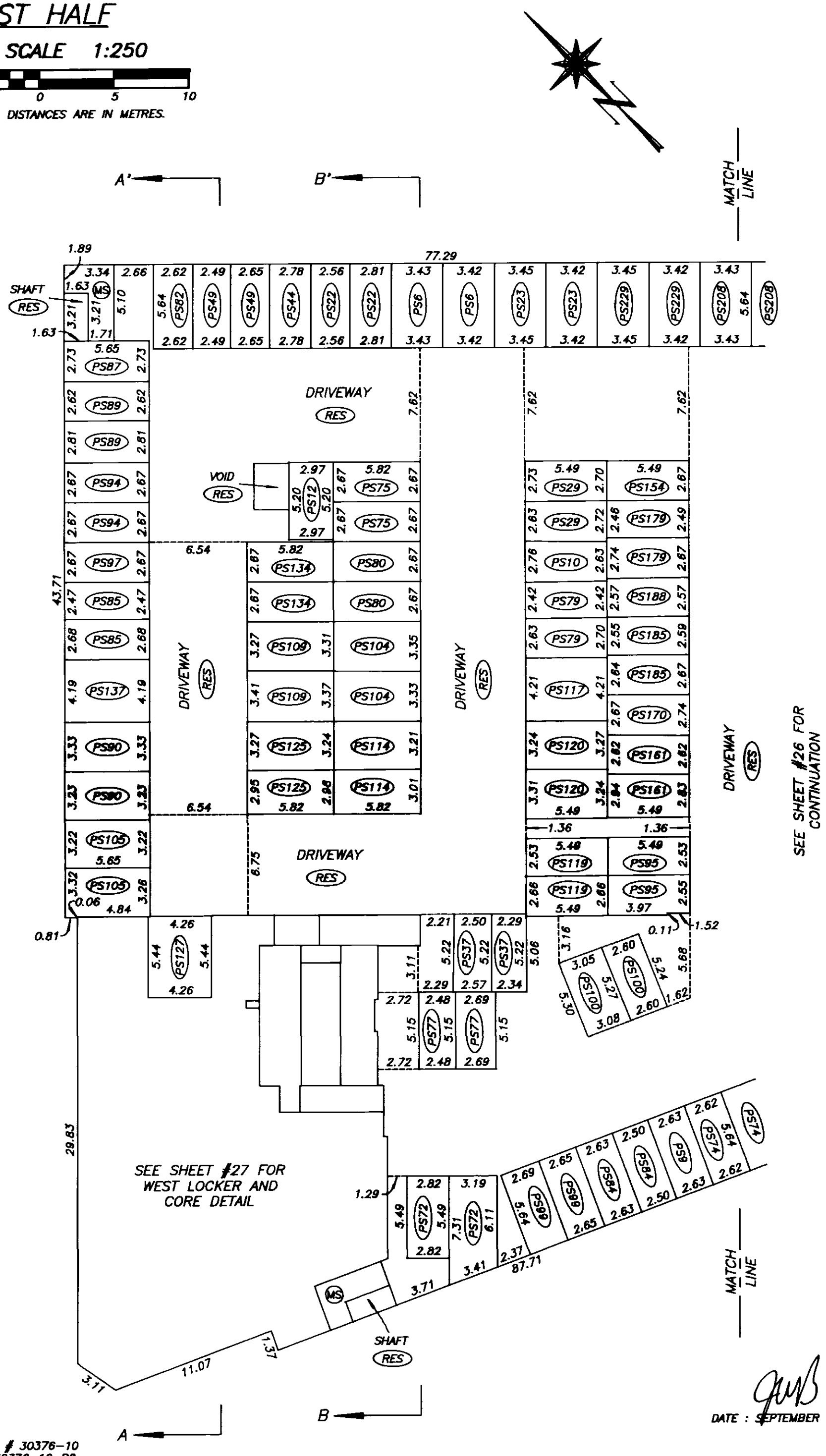

DATE : SEPTEMBER 26, 2003

DRAWING # 30376-10
FILE # 30376-10_P2

FILED VABCS535 M37352 2004-01-02-13.18.56.751200

PARKING LEVEL TWO
EAST HALF

STRATA PLAN BCS 535

SCALE 1:250

5 0 5 10

ALL DISTANCES ARE IN METRES.

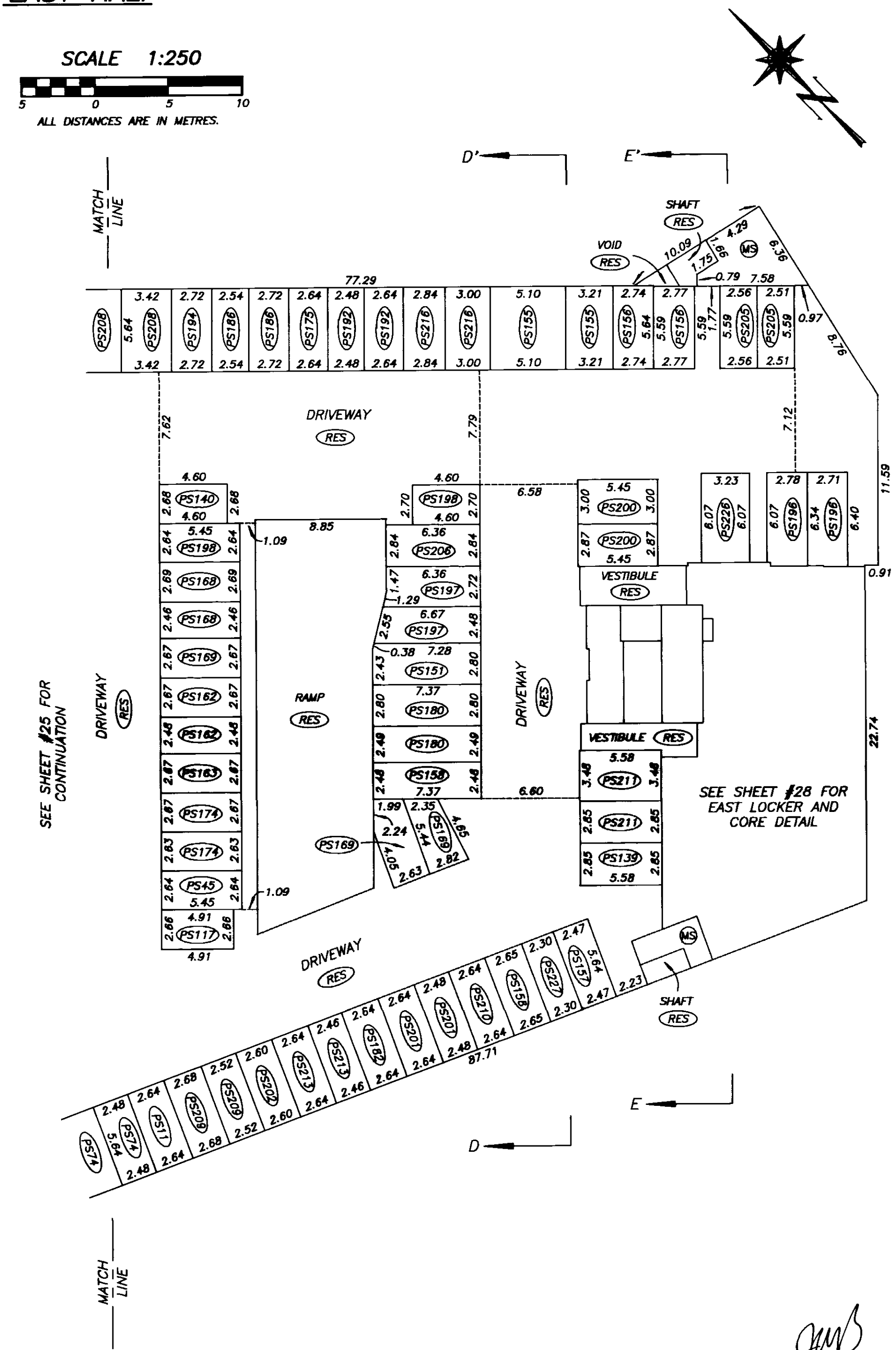

DATE : SEPTEMBER 26, 2003

DRAWING # 30376-10
FILE # 30376-10_P2

FILED VABCS535 M37352 2004-01-02-13.18.56.751200

PARKING LEVEL TWO
WEST LOCKER AND CORE DETAIL

STRATA PLAN BCS 535

SCALE 1:100

2 0 2 4

ALL DISTANCES ARE IN METRES.

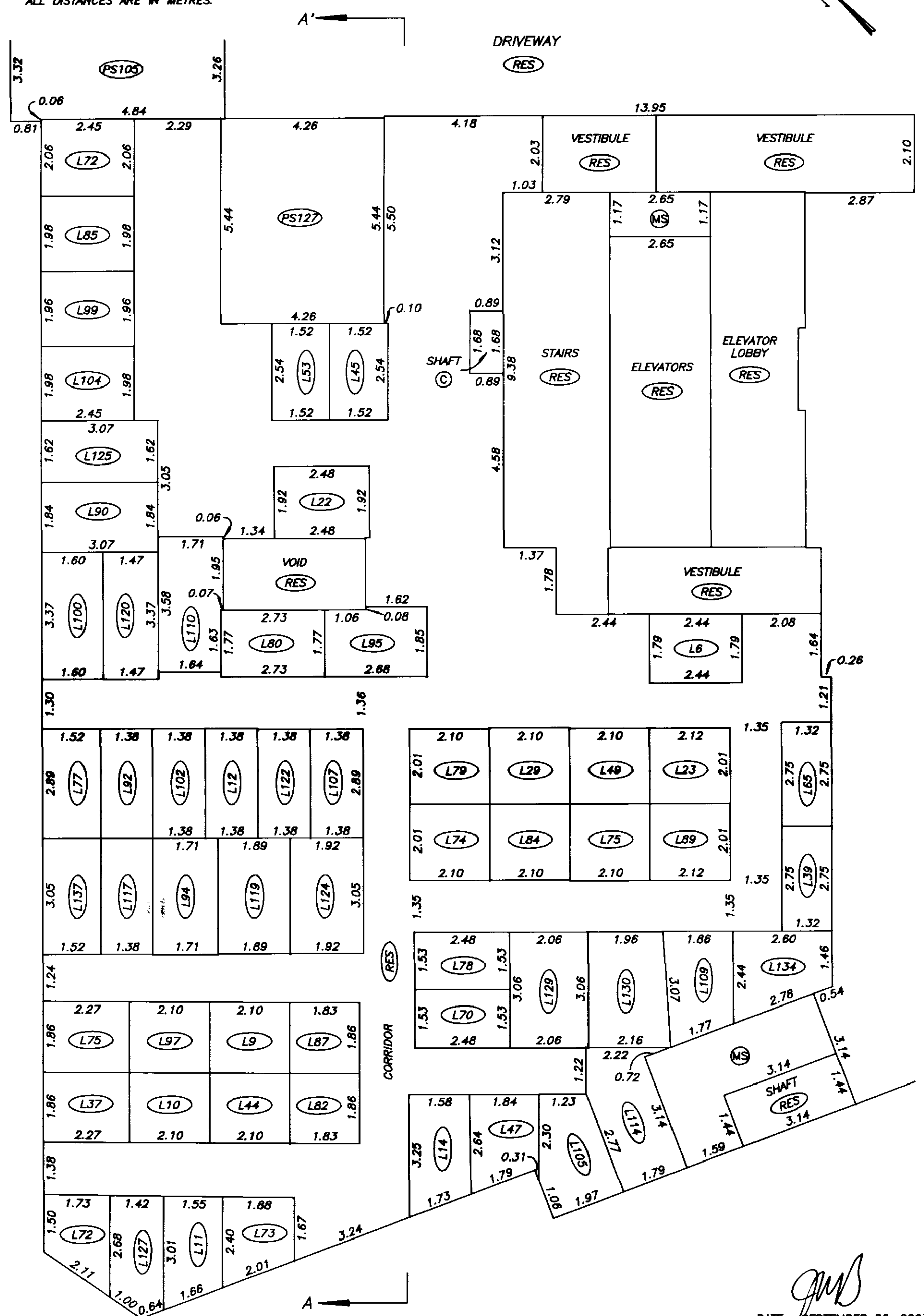

DATE : SEPTEMBER 26, 2003

DRAWING # 30376-10
FILE # 30376-10_P2

FILED VABCS535 M37352 2004-01-02-13.18.56.751200

PARKING LEVEL TWO
EAST LOCKER AND CORE DETAIL

STRATA PLAN BCS 535

SCALE 1:100

2 0 2 4

ALL DISTANCES ARE IN METRES.

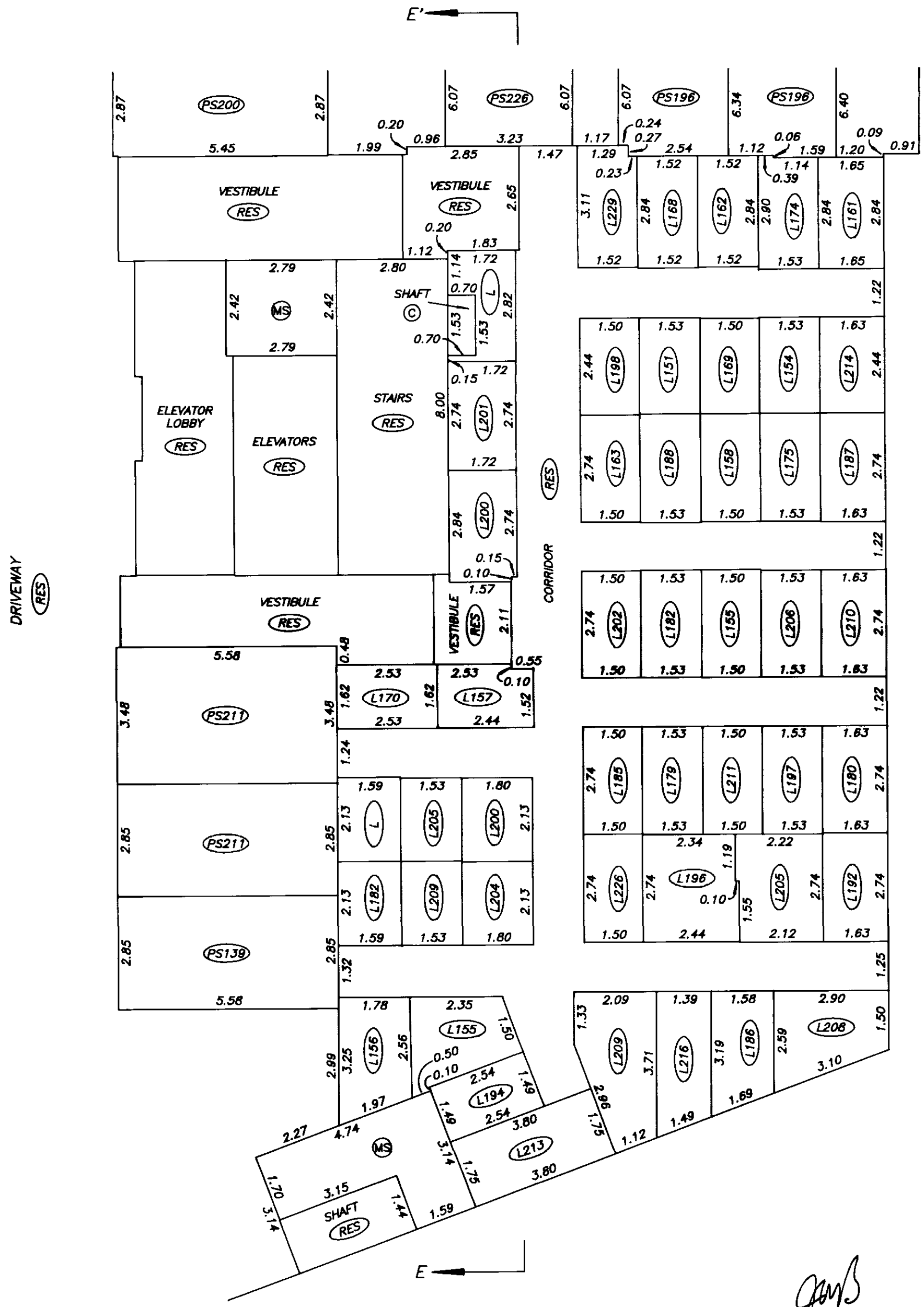

DATE : SEPTEMBER 26, 2003

DRAWING # 30376-10
FILE # 30376-10_P2

FILED VABC535 M37352 2004-01-02-13.18.56.751200

PARKING LEVEL ONE WEST HALF

STRATA PLAN BCS 535

SCALE 1:250

5 0 5 10

ALL DISTANCES ARE IN METRES.

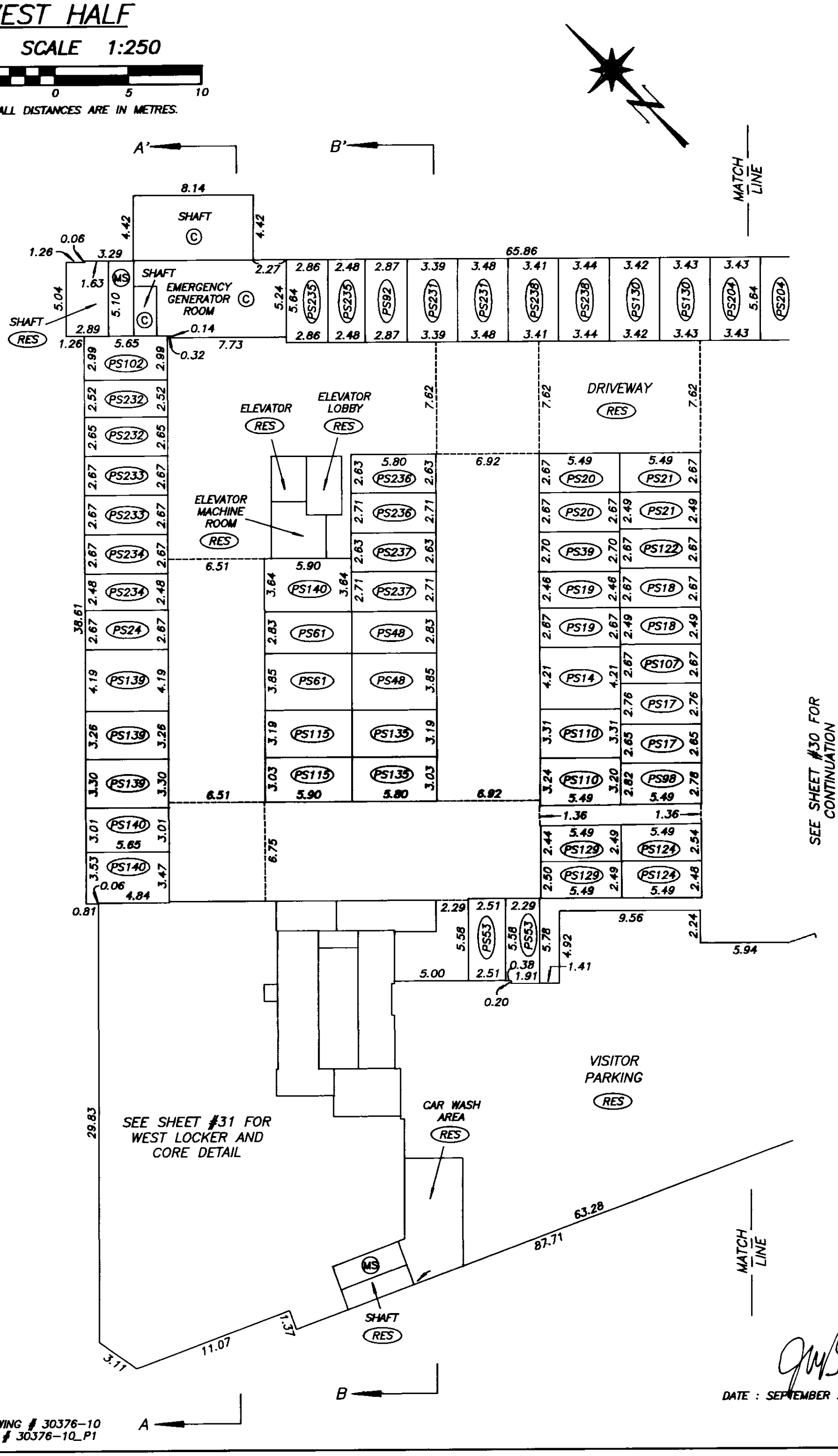

FILED VABCS535 M37352 2004-01-02-13.18.56.751200

PARKING LEVEL ONE EAST HALF

STRATA PLAN BCS 535

SCALE 1:250

5 0 5 10

ALL DISTANCES ARE IN METRES.

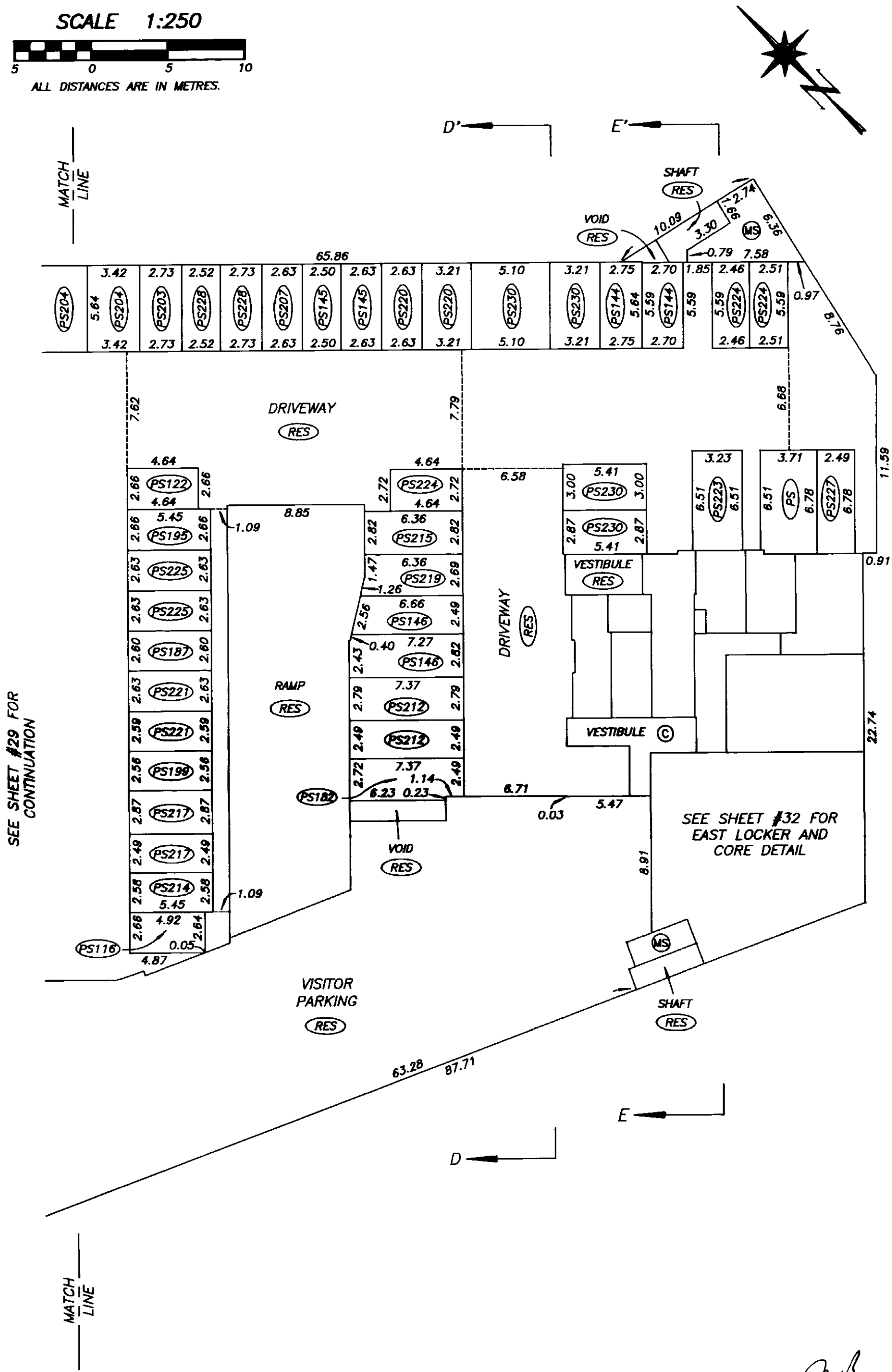

DATE : SEPTEMBER 26, 2003

DRAWING # 30376-10
FILE # 30376-10_P1

FILED VABCS535 M37352 2004-01-02-13.18.56.751200

PARKING LEVEL ONE
WEST LOCKER AND CORE DETAIL

STRATA PLAN BCS 535

SCALE 1:100

2 0 2 4

ALL DISTANCES ARE IN METRES.

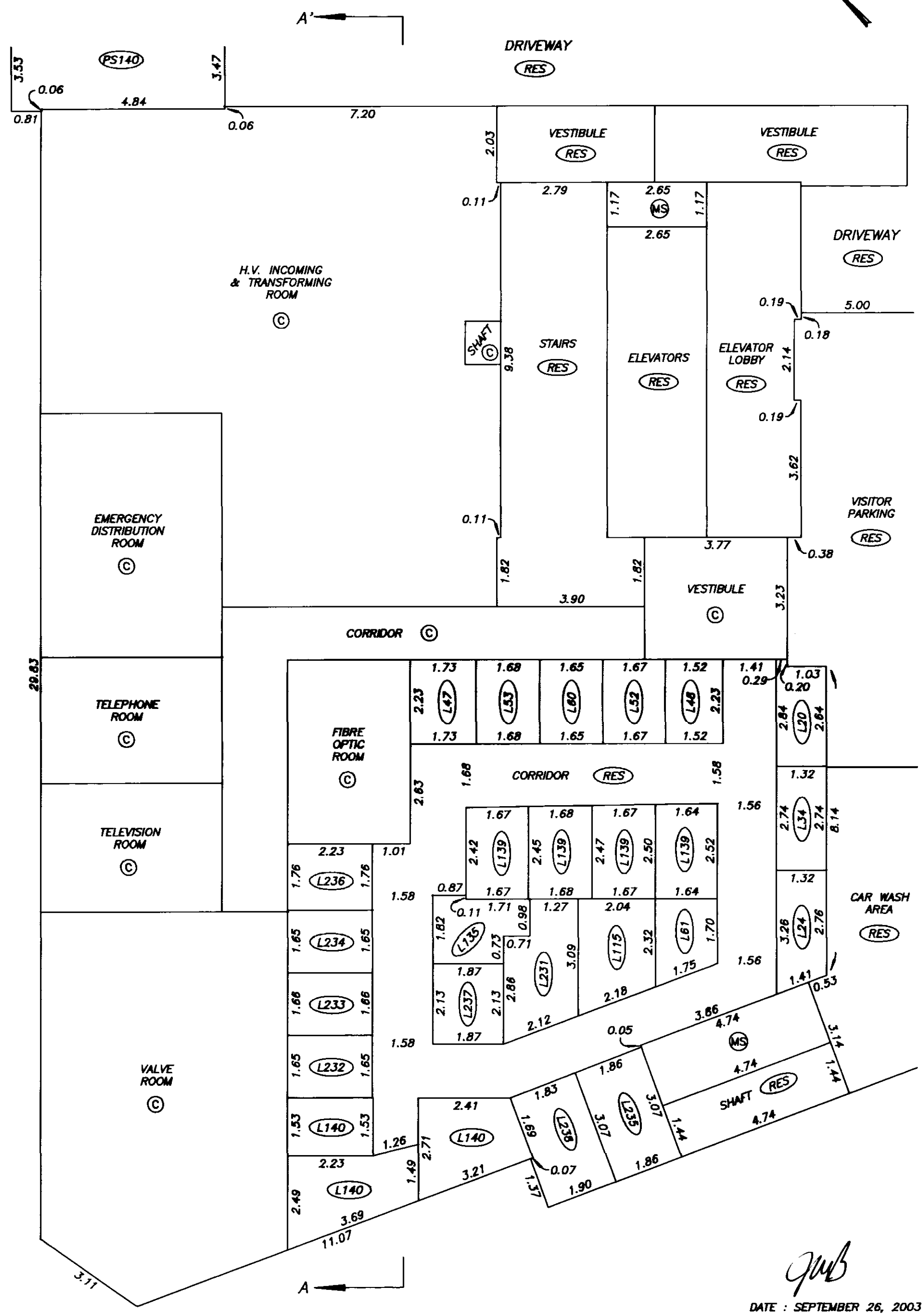

DATE : SEPTEMBER 26, 2003

DRAWING # 30376-10
FILE # 30376-10_P1

FILED VABCS535 M37352 2004-01-02-13.18.56.751200

PARKING LEVEL ONE
EAST LOCKER AND CORE DETAIL

STRATA PLAN BCS 535

SCALE 1:100

2 0 2 4

ALL DISTANCES ARE IN METRES.

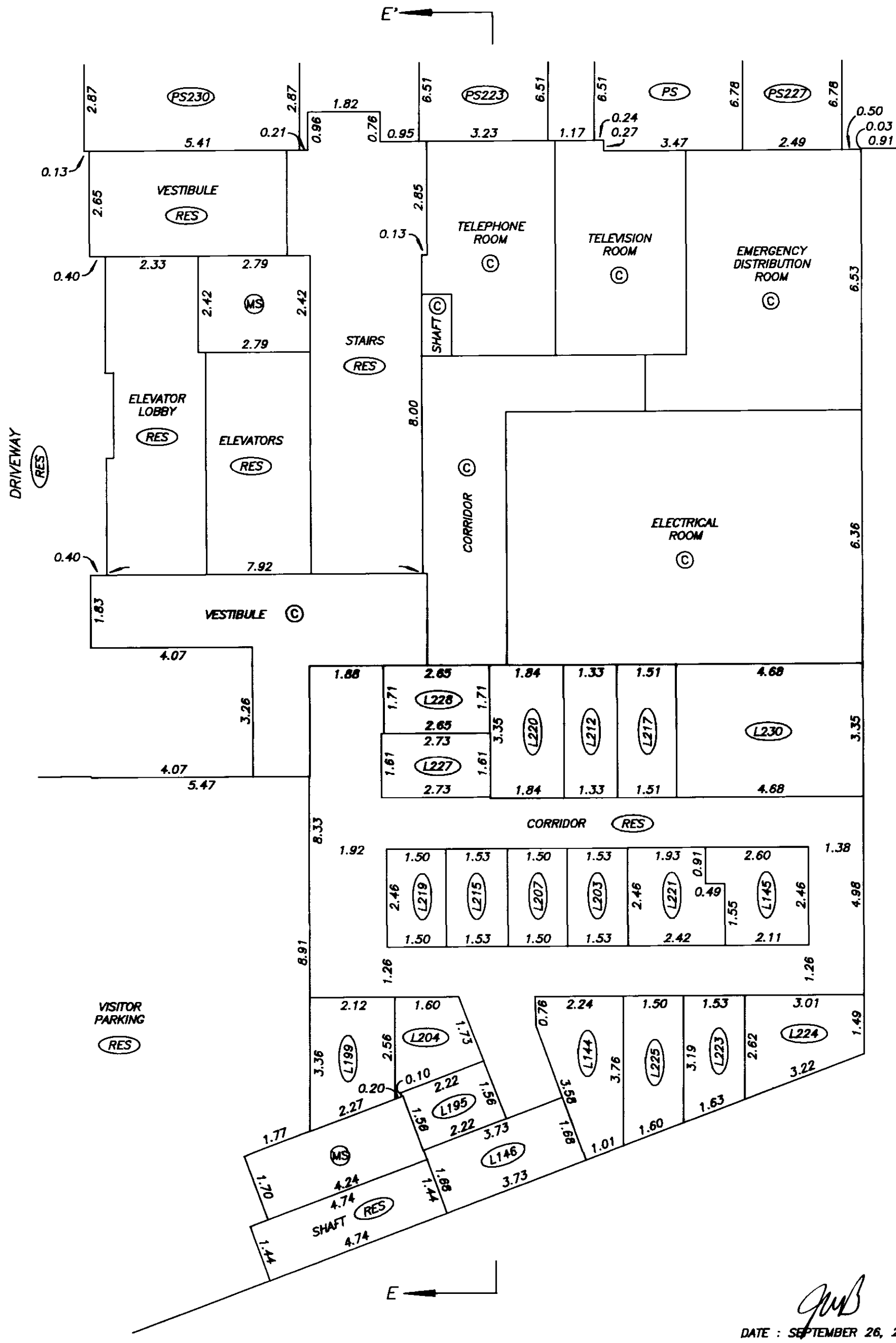

DATE : SEPTEMBER 26, 2003

DRAWING # 30376-10
FILE # 30376-10_P1

FILED VABCS535 M37352 2004-01-02-13.18.56.751200

PARKING LEVEL GP
FLOOR PLAN – WEST HALF

STRATA PLAN BCS 535

SCALE 1:250

4 0 4 8

ALL DISTANCES ARE IN METRES.

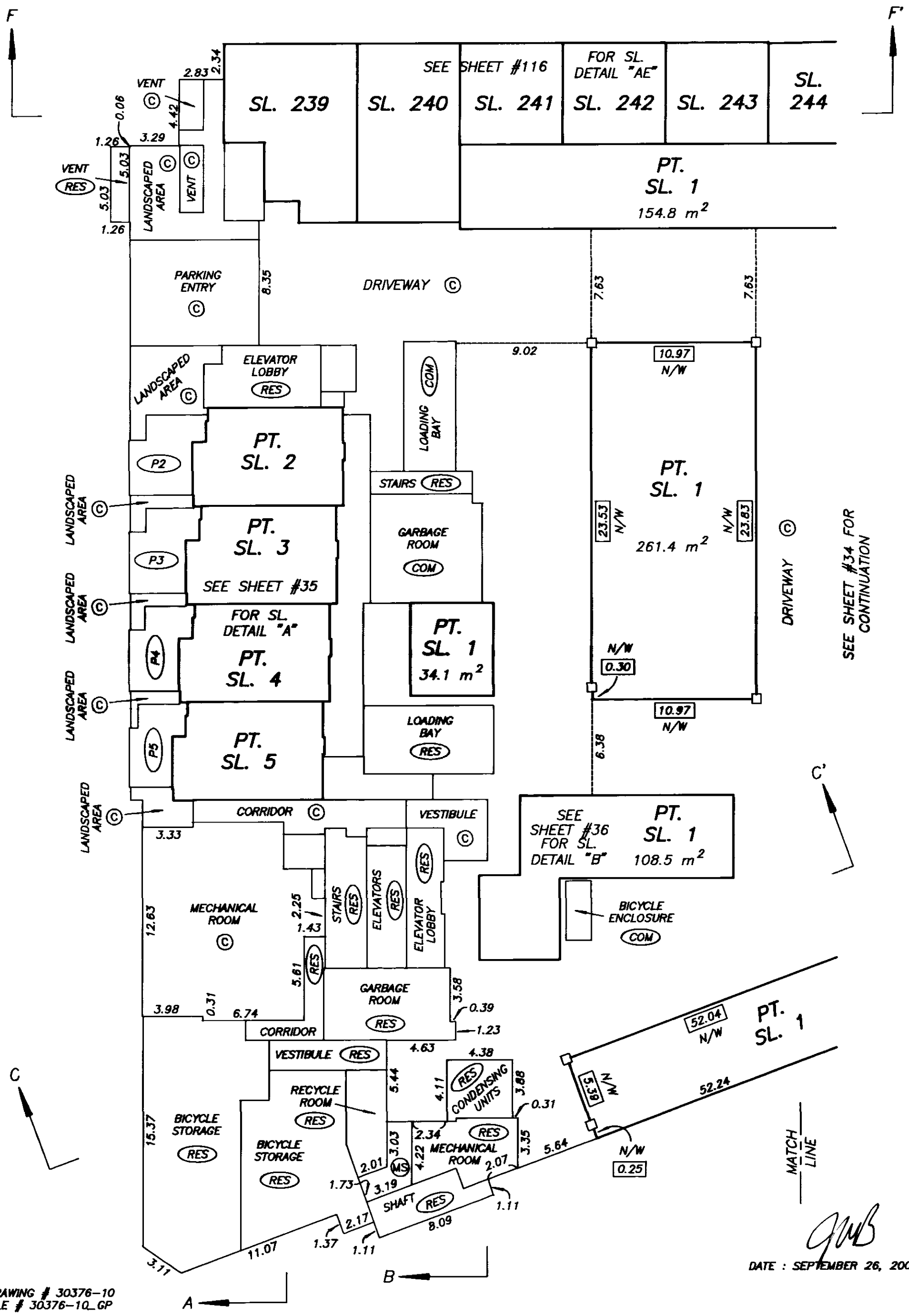

DRAWING # 30376-10
FILE # 30376-10_GP

FILED VABCS535 M37352 2004-01-02-13.18.56.751200

PARKING LEVEL GP
FLOOR PLAN – EAST HALF

STRATA PLAN BCS 535

SCALE 1:250

4 0 4 8

ALL DISTANCES ARE IN METRES.

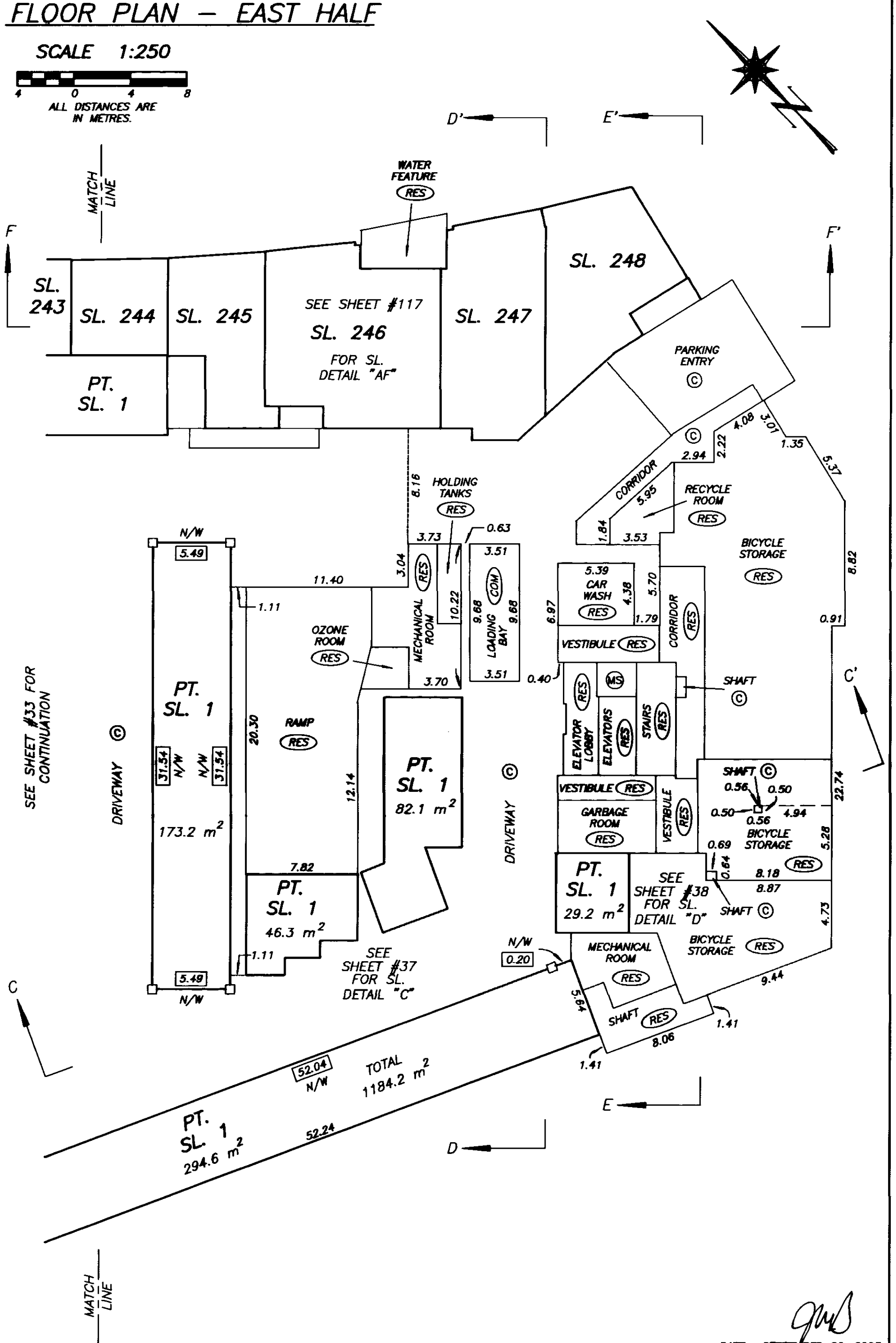

DATE : SEPTEMBER 26, 2003

DRAWING # 30376-10
FILE # 30376-10_GP

FILED VABC535 M37352 2004-01-02-13.18.56.751200

PARKING LEVEL GP
FLOOR PLAN DETAIL "A"
BUILDING 1

STRATA PLAN BCS 535

SCALE 1:125

2 0 2 4

ALL DISTANCES ARE IN METRES.

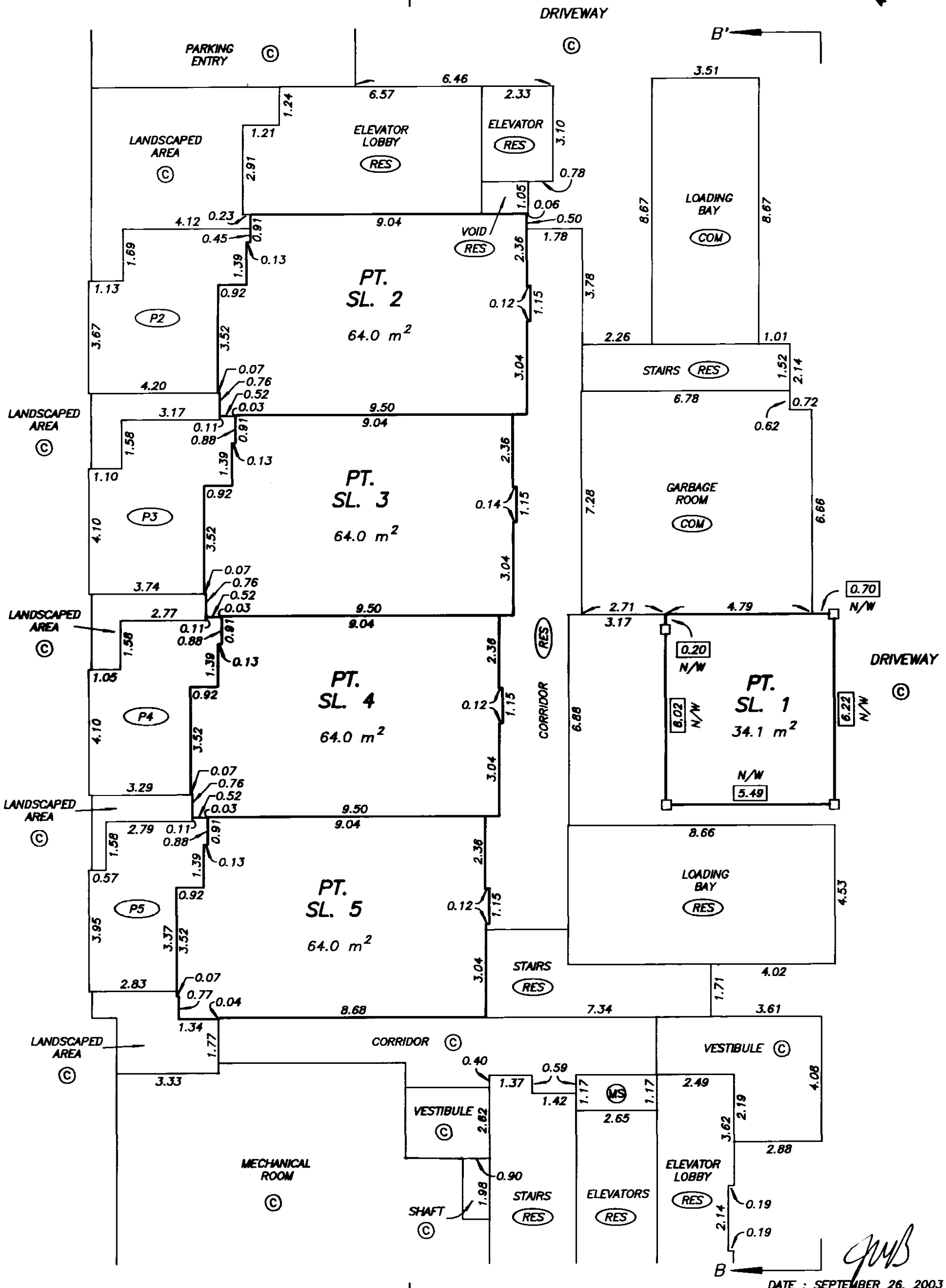

DATE : SEPTEMBER 26, 2003

DRAWING # 30376-10
FILE # 30376-10_GP

FILED VABCS535 M37352 2004-01-02-13.18.56.751200

PARKING LEVEL GP
FLOOR PLAN DETAIL "B"

STRATA PLAN BCS 535

SCALE 1:125

2 0 2 4

ALL DISTANCES ARE IN METRES.

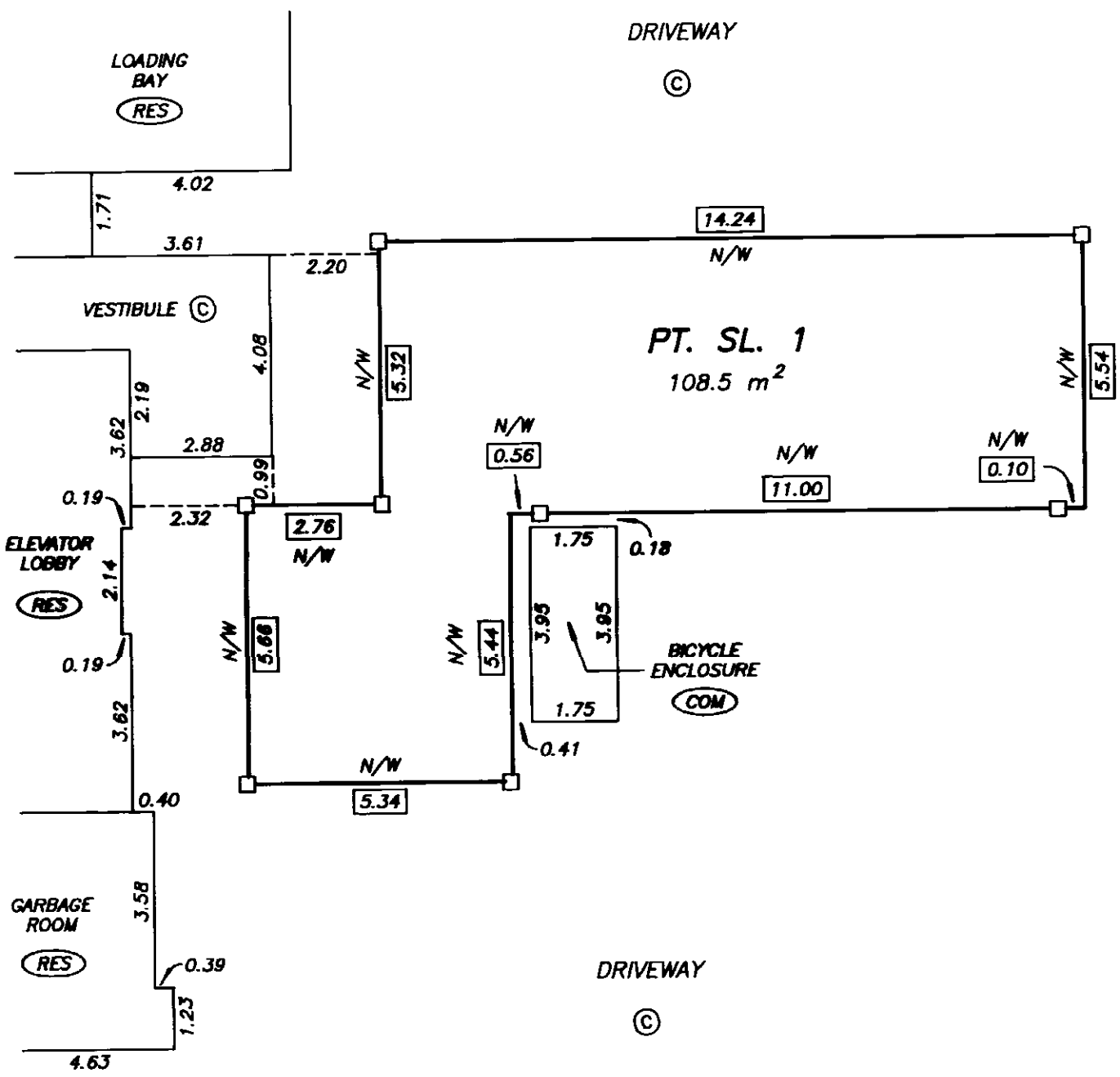

DATE : SEPTEMBER 26, 2003

DRAWING # 30376-10
FILE # 30376-10_GP

FILED VABCS535 M37352 2004-01-02-13.18.56.751200

PARKING LEVEL GP
FLOOR PLAN DETAIL "C"

STRATA PLAN BCS 535

SCALE 1:125

2 0 2 4

ALL DISTANCES ARE IN METRES.

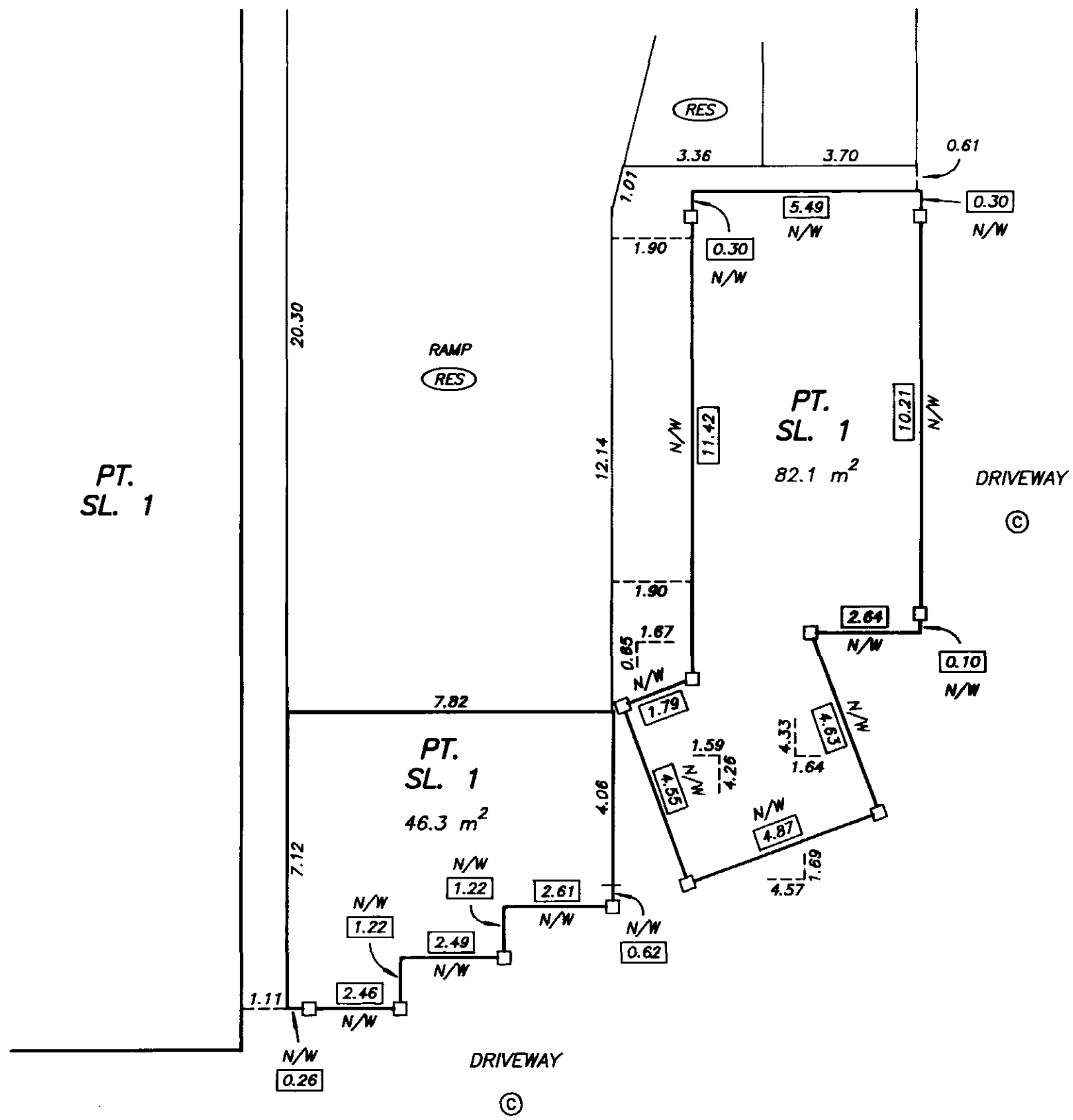

DATE : SEPTEMBER 26, 2003

DRAWING # 30376-10
FILE # 30376-10_GP

FILED VABCS535 M37352 2004-01-02-13.18.56.751200

PARKING LEVEL GP
FLOOR PLAN DETAIL "D"

STRATA PLAN BCS 535

SCALE 1:125

2 0 2 4

ALL DISTANCES ARE IN METRES.

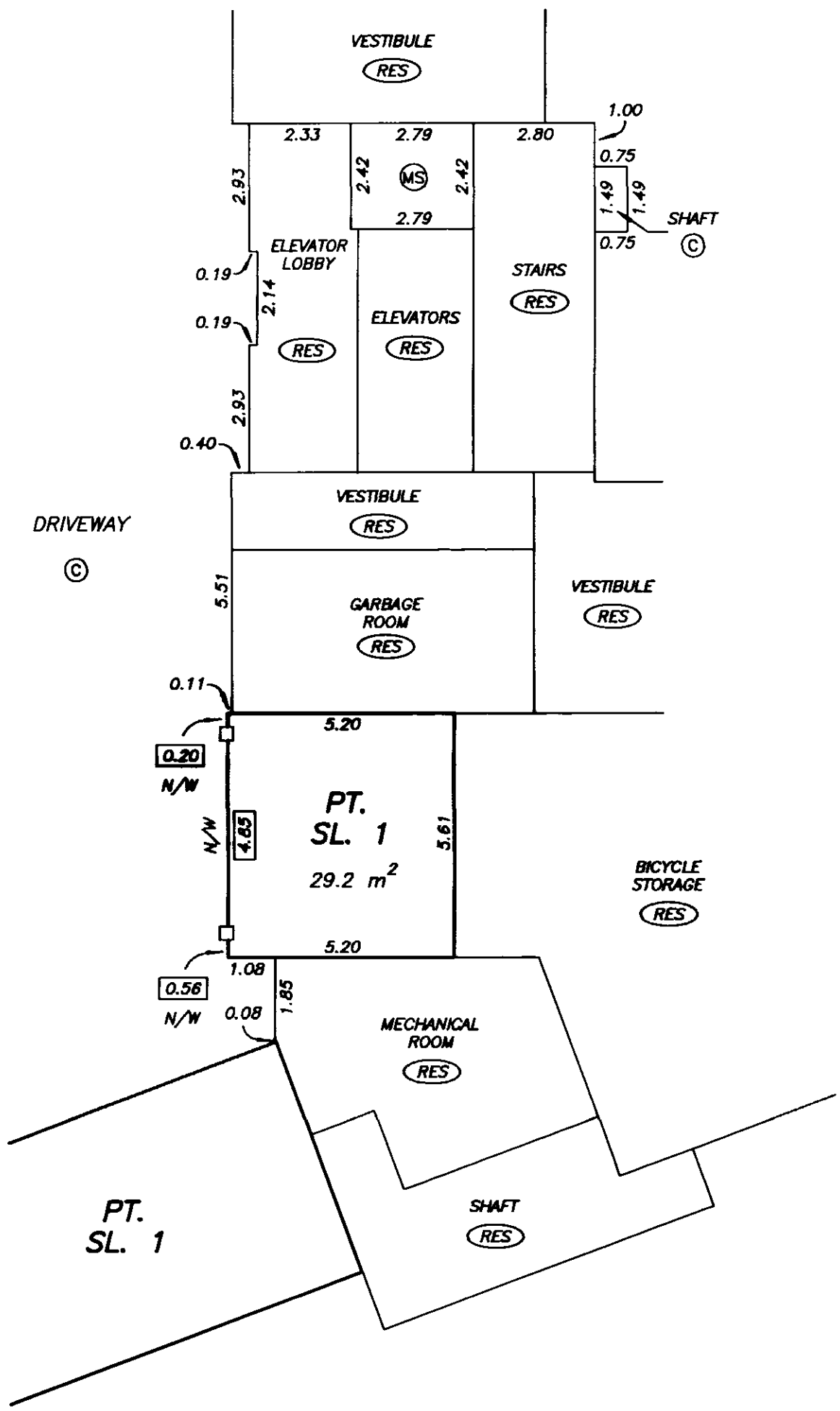

DATE : SEPTEMBER 26, 2003

DRAWING # 30376-10
FILE # 30376-10_GP

FILED VABC535 M37352 2004-01-02-13.18.56.751200

GROUND LEVEL FLOOR PLAN
WEST HALF

STRATA PLAN BCS 535

SCALE 1:250

4 0 4 8

ALL DISTANCES ARE IN METRES.

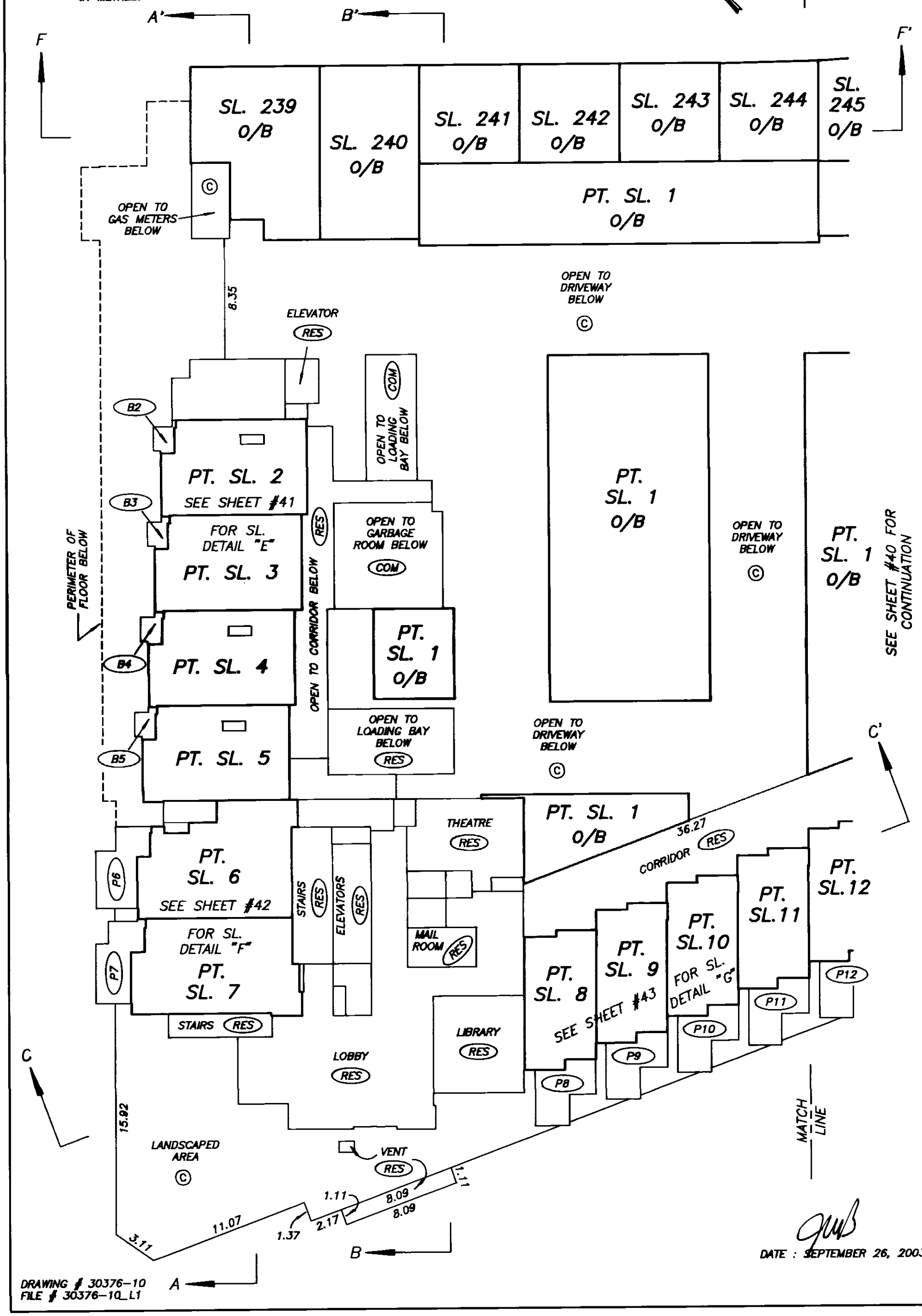

DATE : SEPTEMBER 26, 2003

DRAWING # 30376-10
FILE # 30376-10_L1

FILED VABCS535 M37352 2004-01-02-13.18.56.751200

GROUND LEVEL FLOOR PLAN
EAST HALF

STRATA PLAN BCS 535

SCALE 1:250

4 0 4 8

ALL DISTANCES ARE IN METRES.

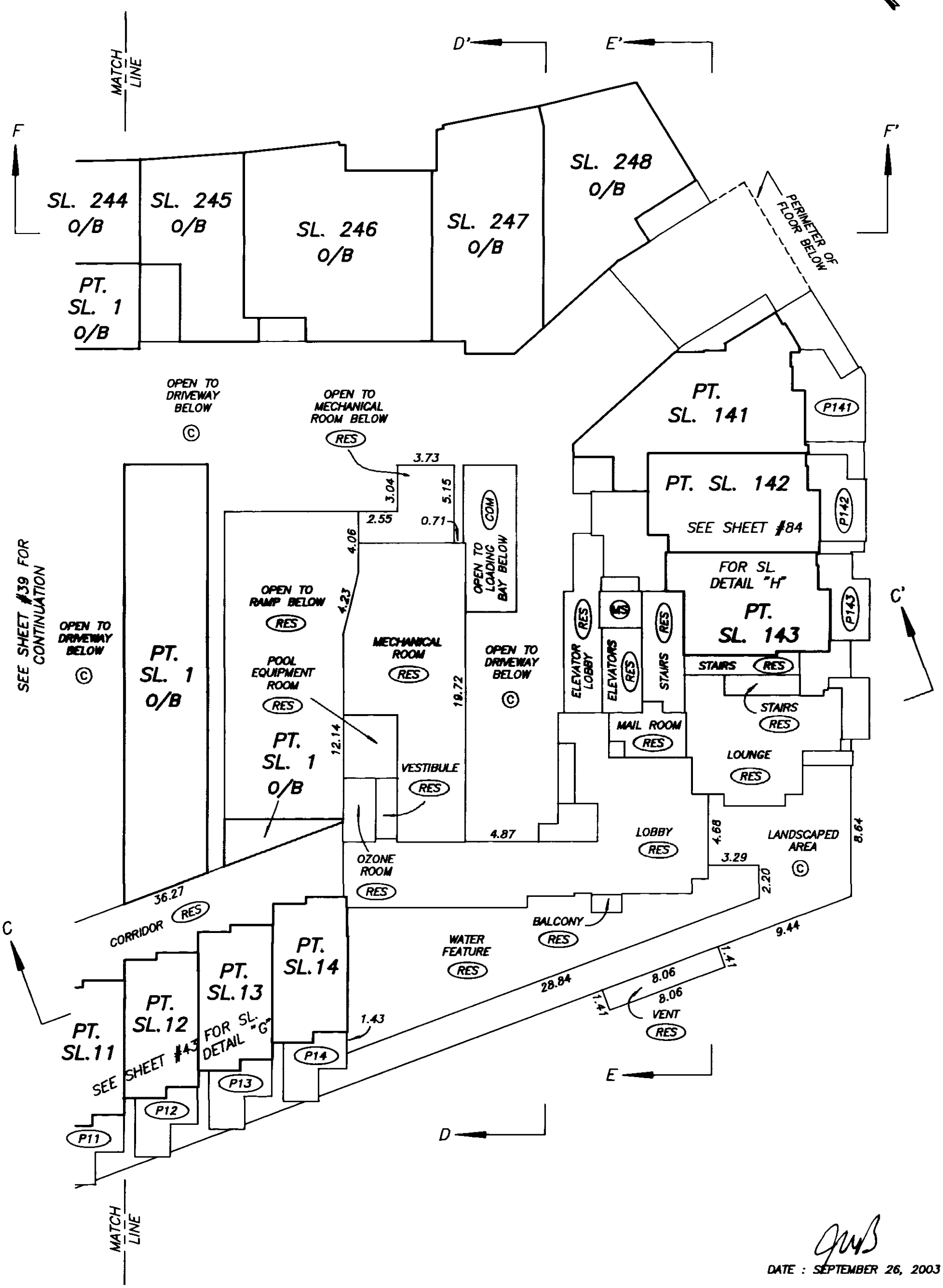

DATE : SEPTEMBER 26, 2003

DRAWING # 30376-10
FILE # 30376-10_L1

FILED VABCS535 M37352 2004-01-02-13.18.56.751200

GROUND LEVEL FLOOR PLAN DETAIL "E"

BUILDING 1

STRATA PLAN BCS 535

SCALE 1:125

2 0 2 4

ALL DISTANCES ARE IN METRES.

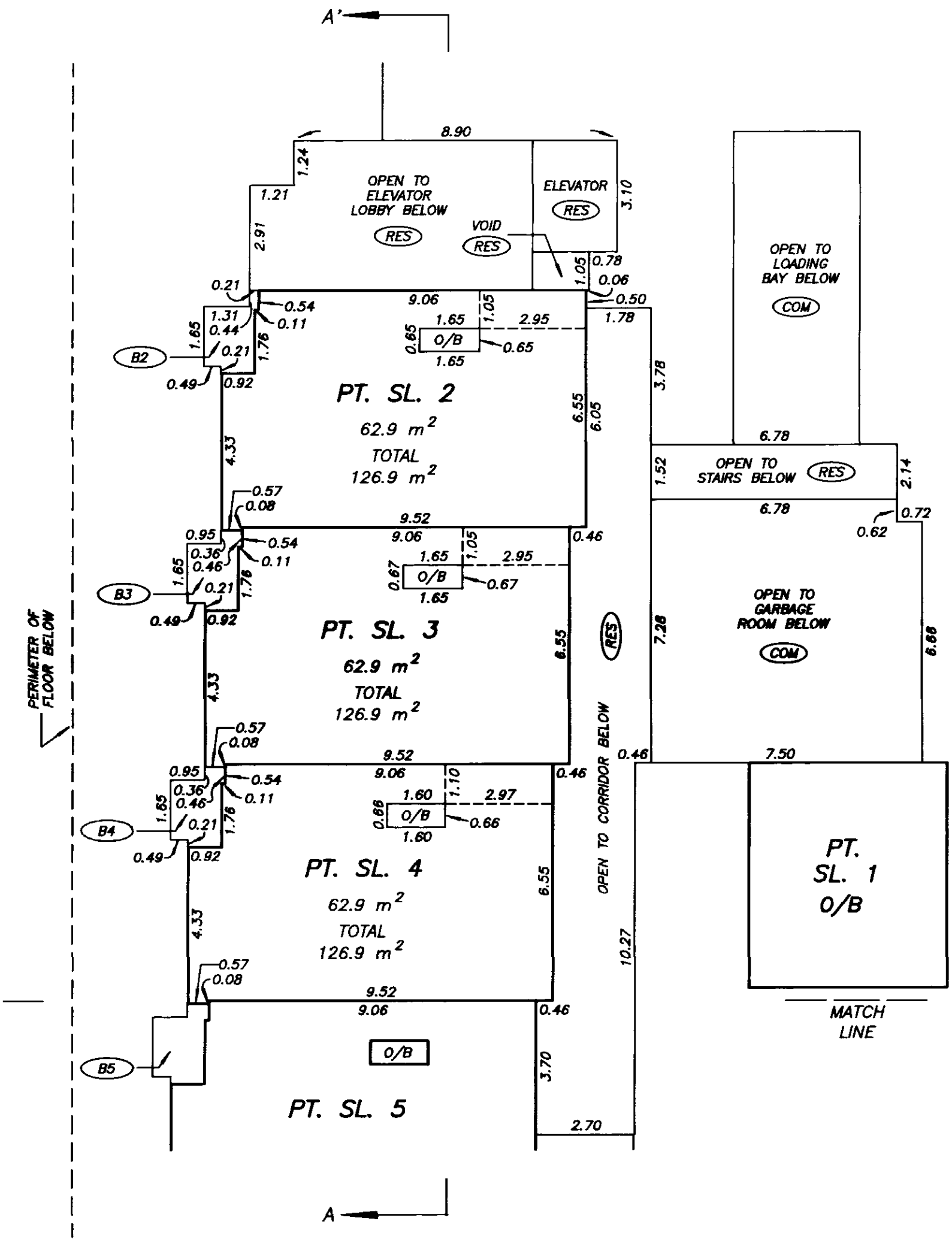

SEE SHEET #42 FOR CONTINUATION

DATE : SEPTEMBER 26, 2003

DRAWING # 30376-10
FILE # 30376-10_L1

FILED VABCS535 M37352 2004-01-02-13.18.56.751200

GROUND LEVEL FLOOR PLAN DETAIL "F"

BUILDING 1

STRATA PLAN BCS 535

SCALE 1:125

2 0 2 4

ALL DISTANCES ARE IN METRES.

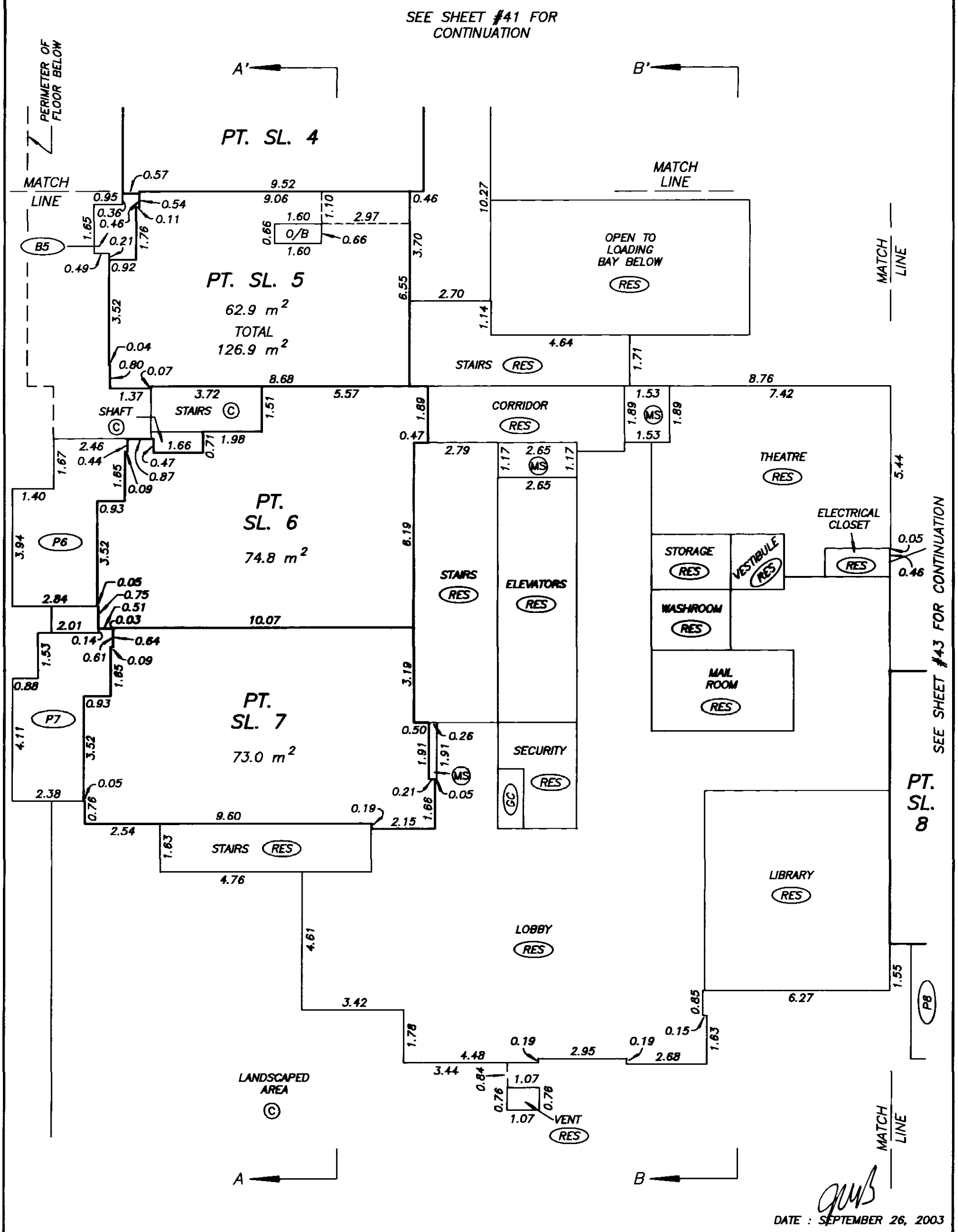

DATE : SEPTEMBER 26, 2003

DRAWING # 30376-10
FILE # 30376-10_L1

FILED VABC535 M37352 2004-01-02-13.18.56.751200

GROUND LEVEL FLOOR PLAN DETAIL "G"

BUILDING 1

STRATA PLAN BCS 535

SCALE 1:125

2 0 2 4

ALL DISTANCES ARE IN METRES.

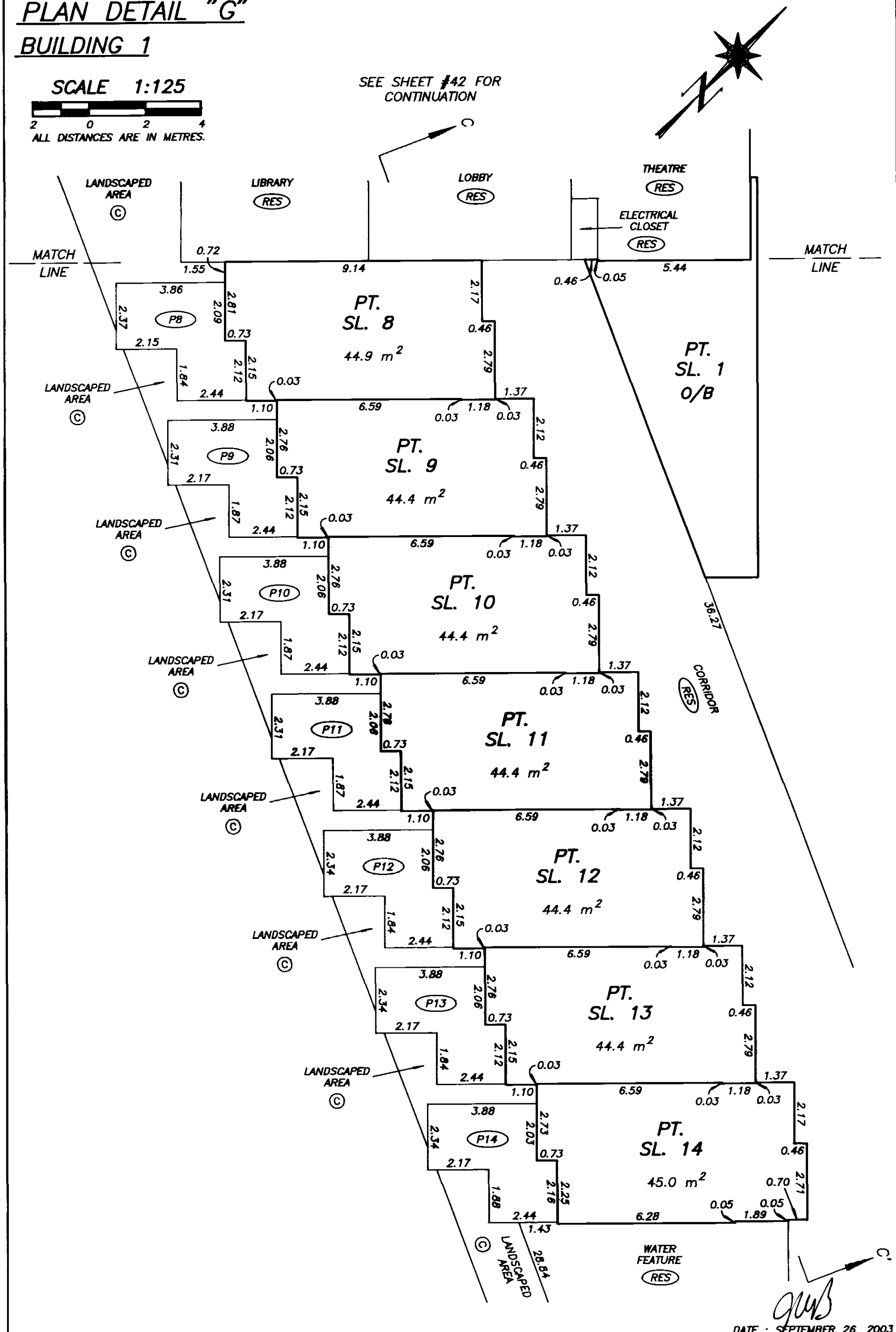

DATE : SEPTEMBER 26, 2003

DRAWING # 30376-10
FILE # 30376-10_B1L1

FILED VABCS535 M37352 2004-01-02-13.18.56.751200

SECOND LEVEL FLOOR PLAN
WEST HALF

STRATA PLAN BCS 535

SCALE 1:250

4 0 4 8

ALL DISTANCES ARE IN METRES.

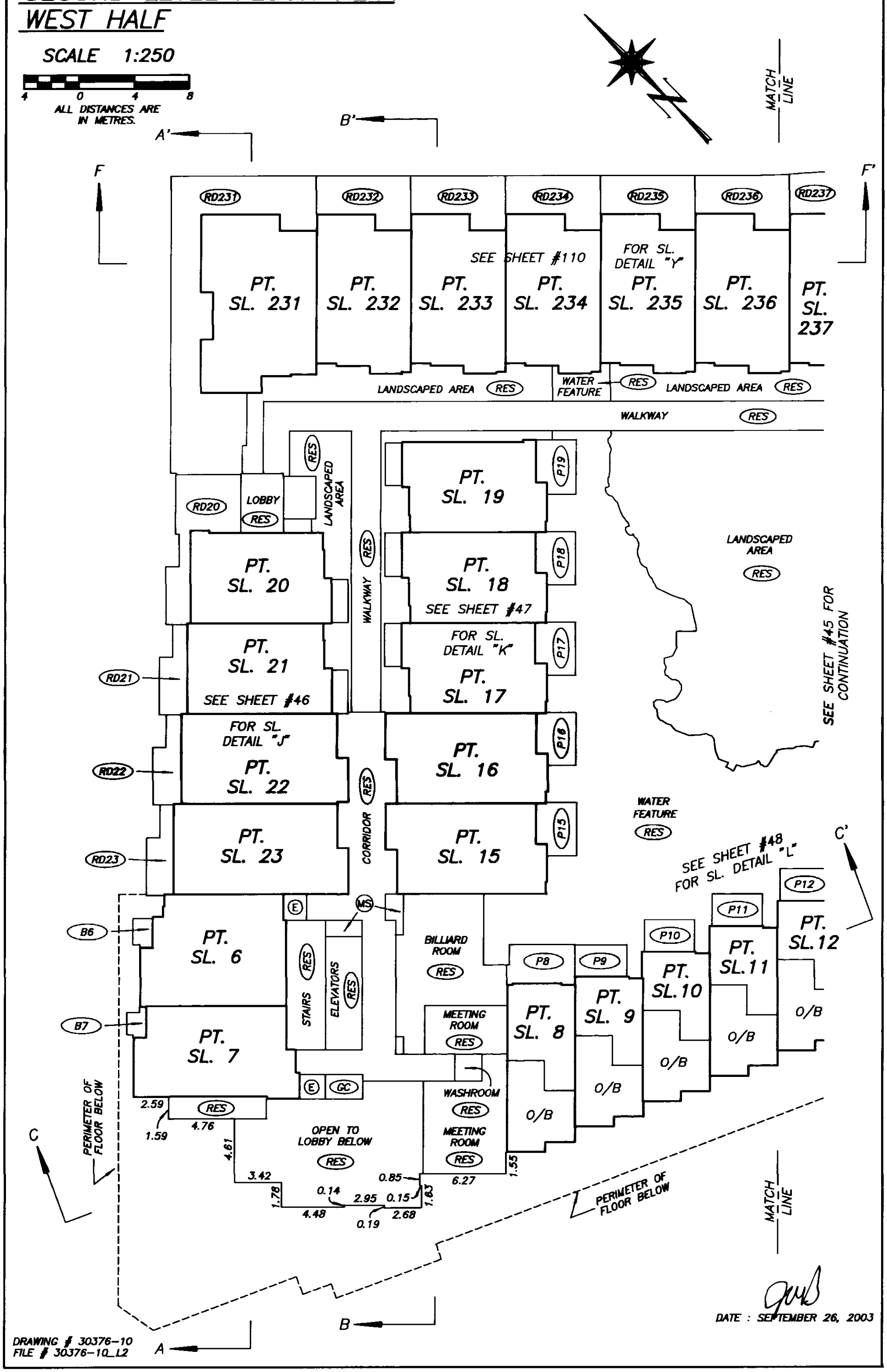

DRAWING # 30376-10
FILE # 30376-10_L2

FILED VABCS535 M37352 2004-01-02-13.18.56.751200

SECOND LEVEL FLOOR PLAN
EAST HALF

STRATA PLAN BCS 535

SCALE 1:250

4 0 4 8

ALL DISTANCES ARE IN METRES.

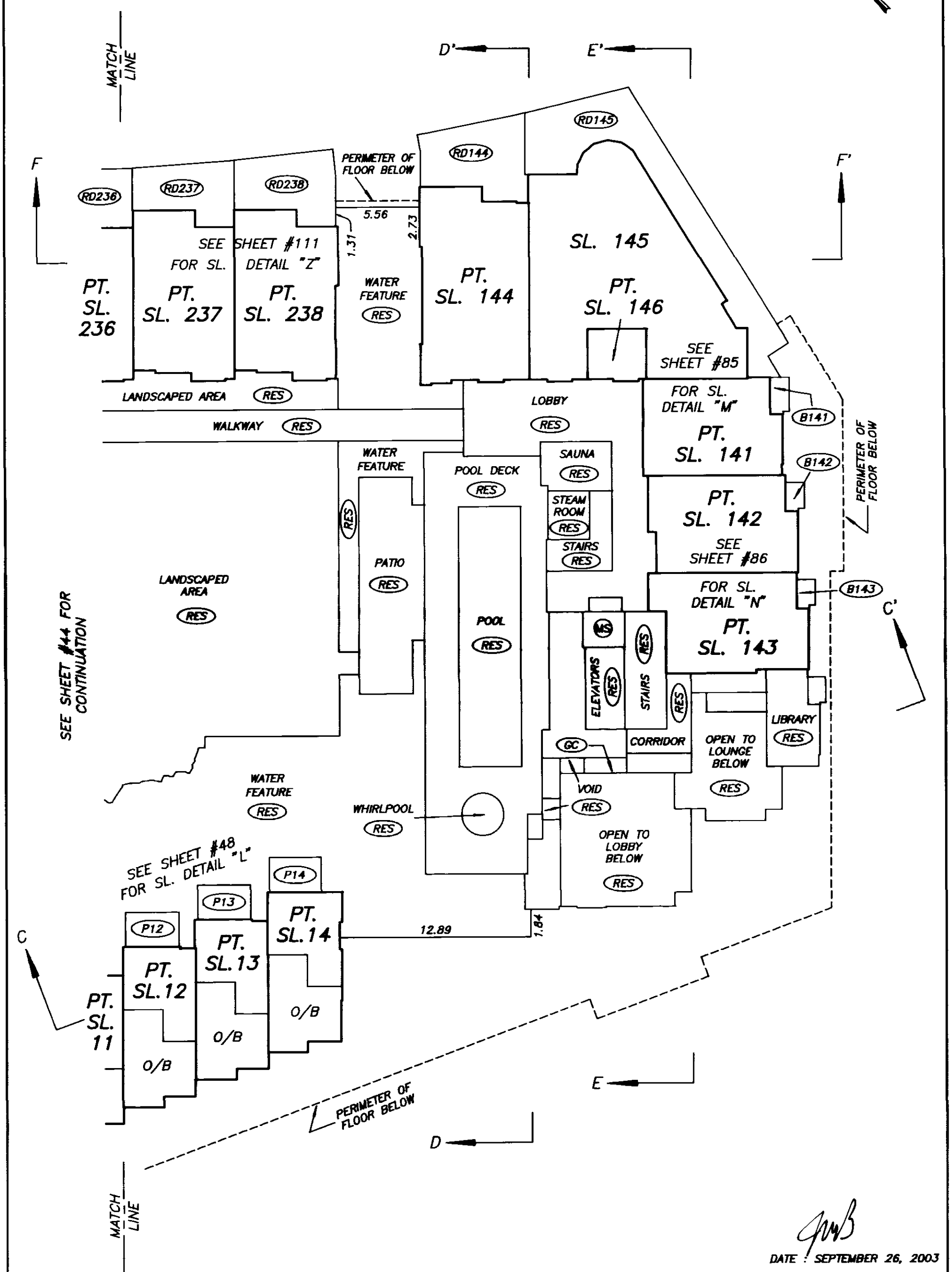

DATE : SEPTEMBER 26, 2003

DRAWING # 30376-10
FILE # 30376-10_L2

FILED VABC5535 M37352 2004-01-02-13.18.56.751200

SECOND LEVEL FLOOR PLAN DETAIL "J" BUILDING 1

STRATA PLAN BCS 535

SCALE 1:125

2 0 2 4

ALL DISTANCES ARE IN METRES.

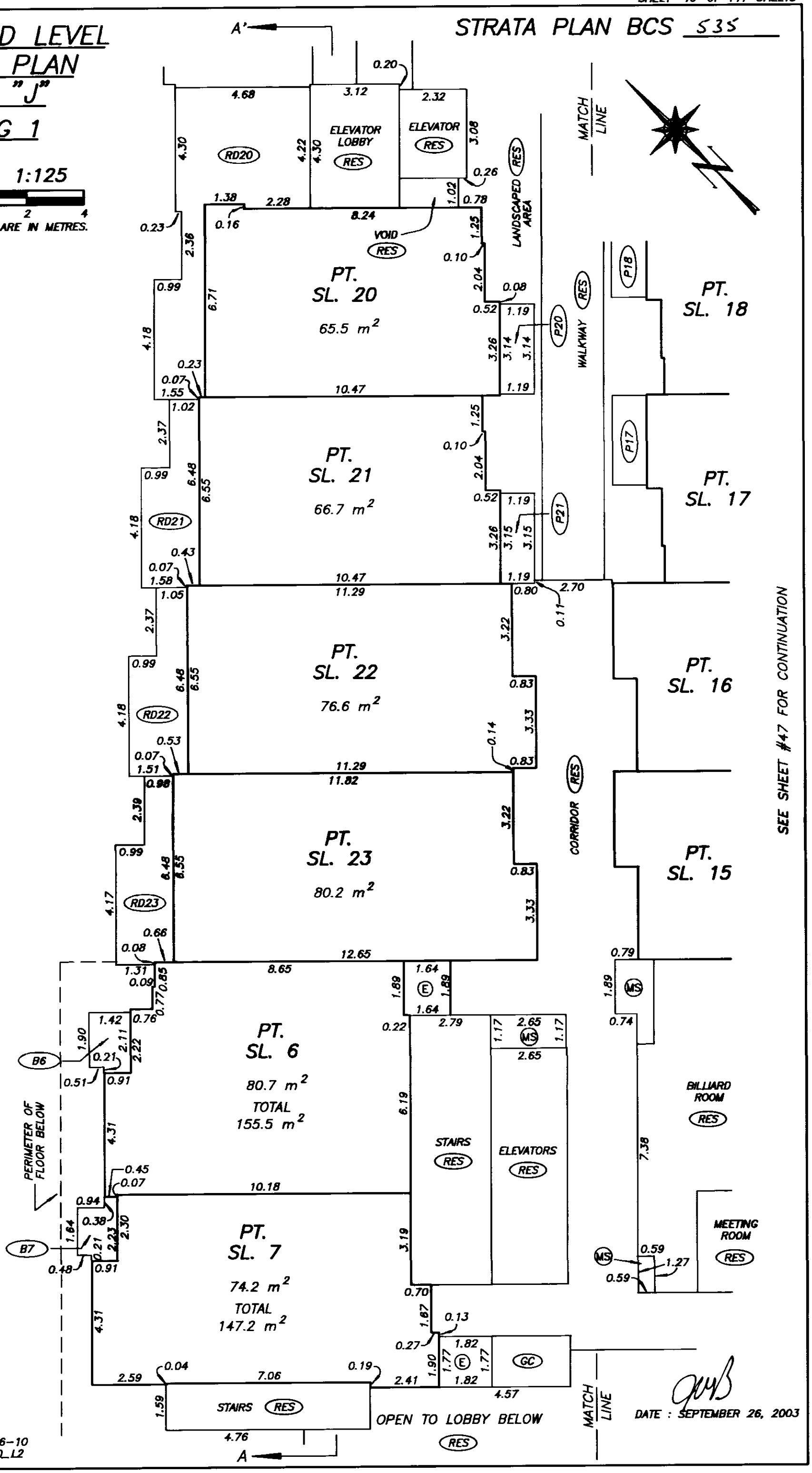

DATE : SEPTEMBER 26, 2003

DRAWING # 30376-10
FILE # 30376-10_L2

FILED VABCS535 M37352 2004-01-02-13.18.56.751200

SECOND LEVEL FLOOR PLAN DETAIL "K" BUILDING 1

STRATA PLAN BCS 535

SCALE 1:125

2 0 2 4

ALL DISTANCES ARE IN METRES.

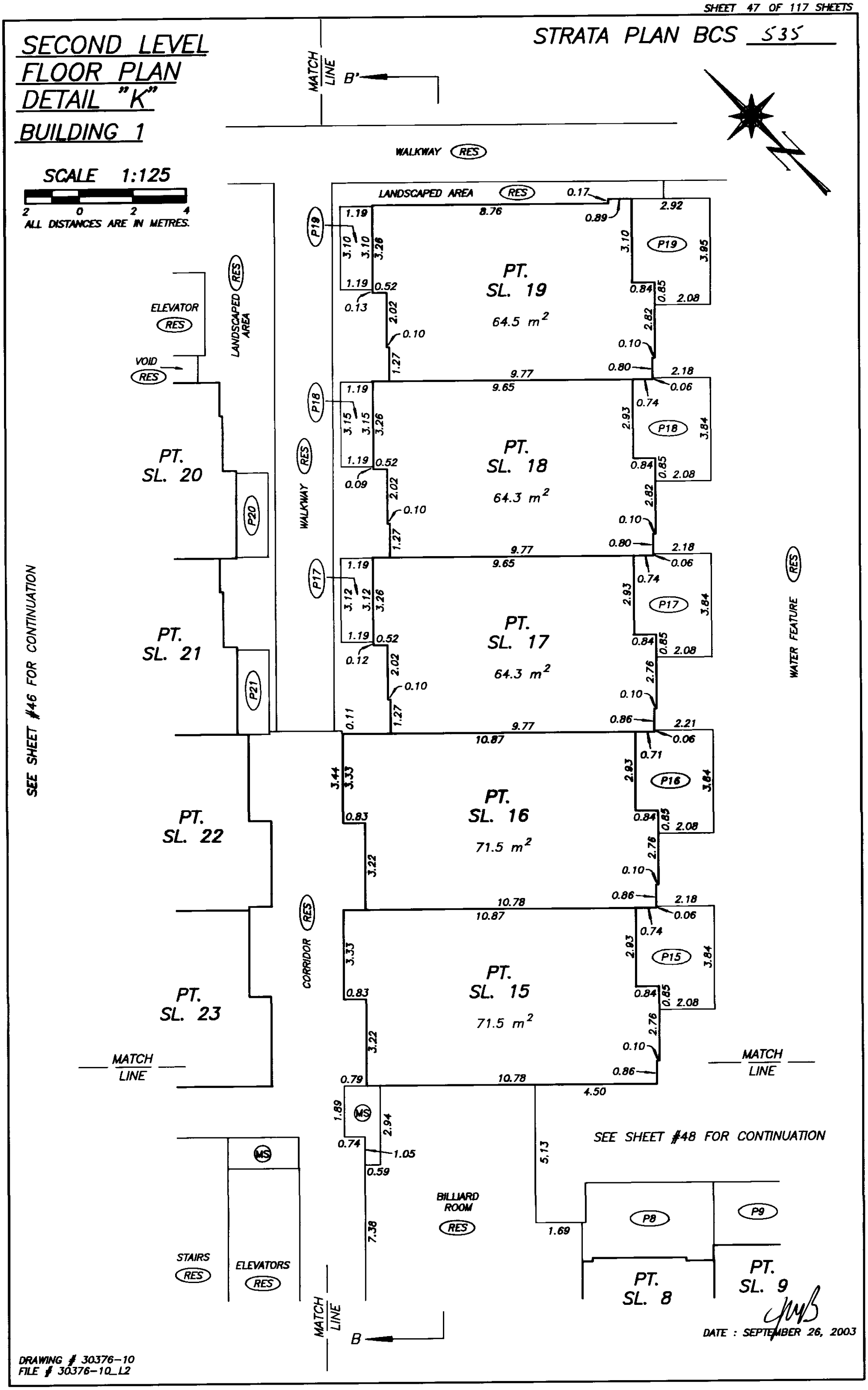

DATE : SEPTEMBER 26, 2003

DRAWING # 30376-10
FILE # 30376-10_L2

FILED VABC5535 M37352 2004-01-02-13.18.56.751200

SECOND LEVEL FLOOR PLAN DETAIL "L"

BUILDING 1

STRATA PLAN BCS 535

SCALE 1:125

2 0 2 4

ALL DISTANCES ARE IN METRES.

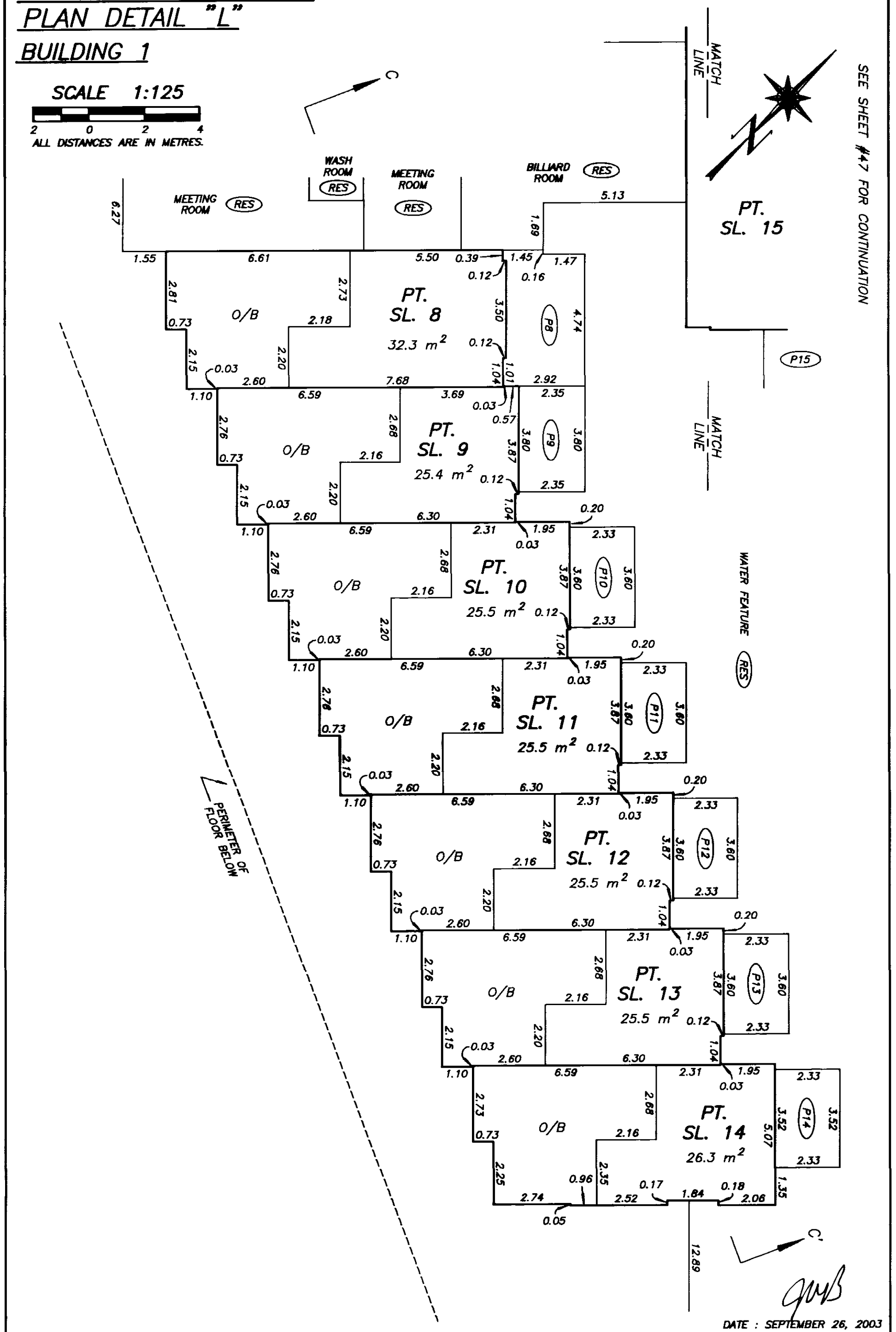

DATE : SEPTEMBER 26, 2003

DRAWING # 30376-10
FILE # 30376-10_L2

FILED VABCS535 M37352 2004-01-02-13.18.56.751200

THIRD LEVEL FLOOR PLAN
WEST HALF

STRATA PLAN BCS 535

SCALE 1:250

4 0 4 8

ALL DISTANCES ARE IN METRES.

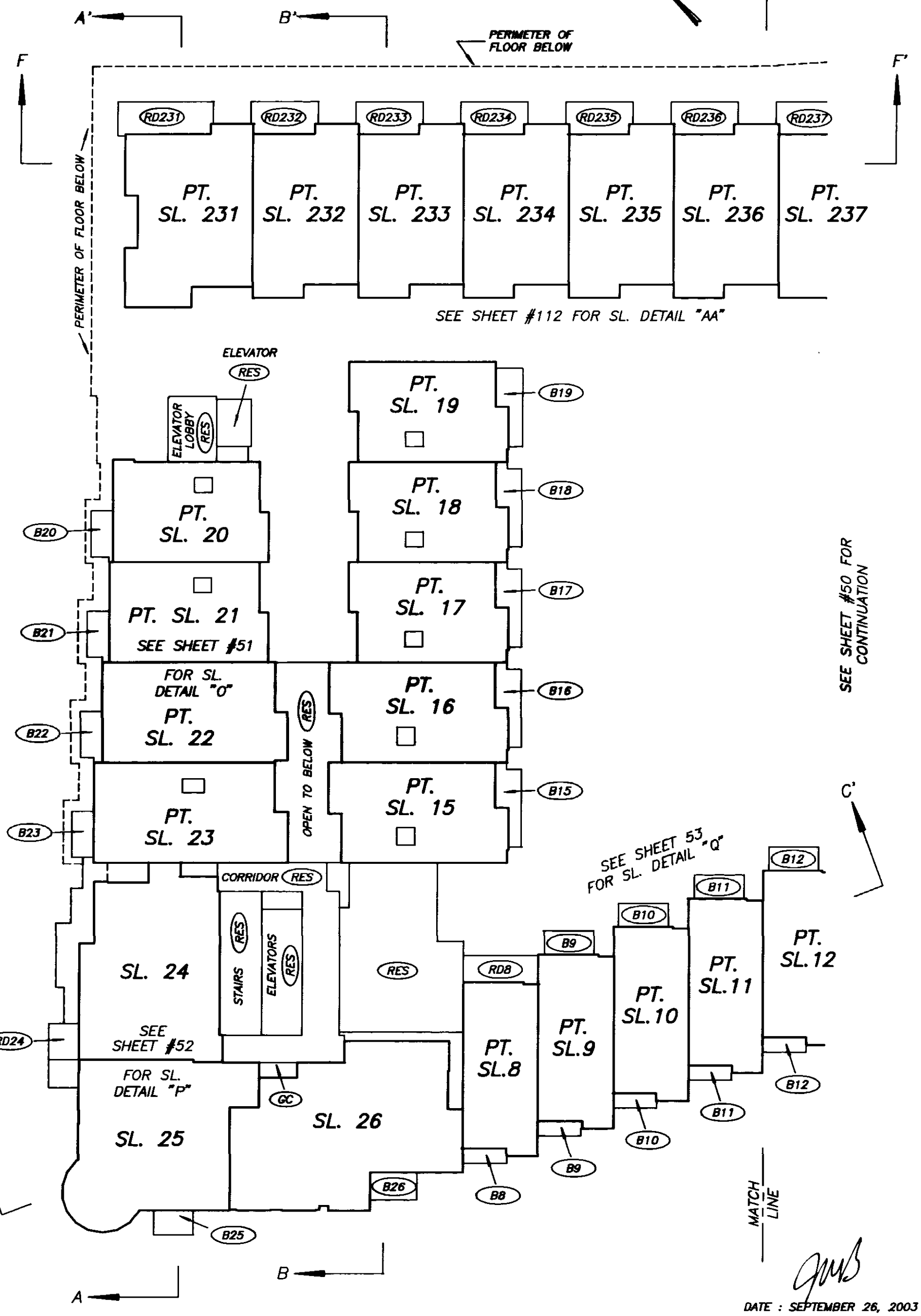

DATE : SEPTEMBER 26, 2003

DRAWING # 30376-10
FILE # 30376-10_L2

FILED VABCS535 M37352 2004-01-02-13.18.56.751200

THIRD LEVEL FLOOR PLAN
EAST HALF

STRATA PLAN BCS 535

SCALE 1:250

4 0 4 8

ALL DISTANCES ARE IN METRES.

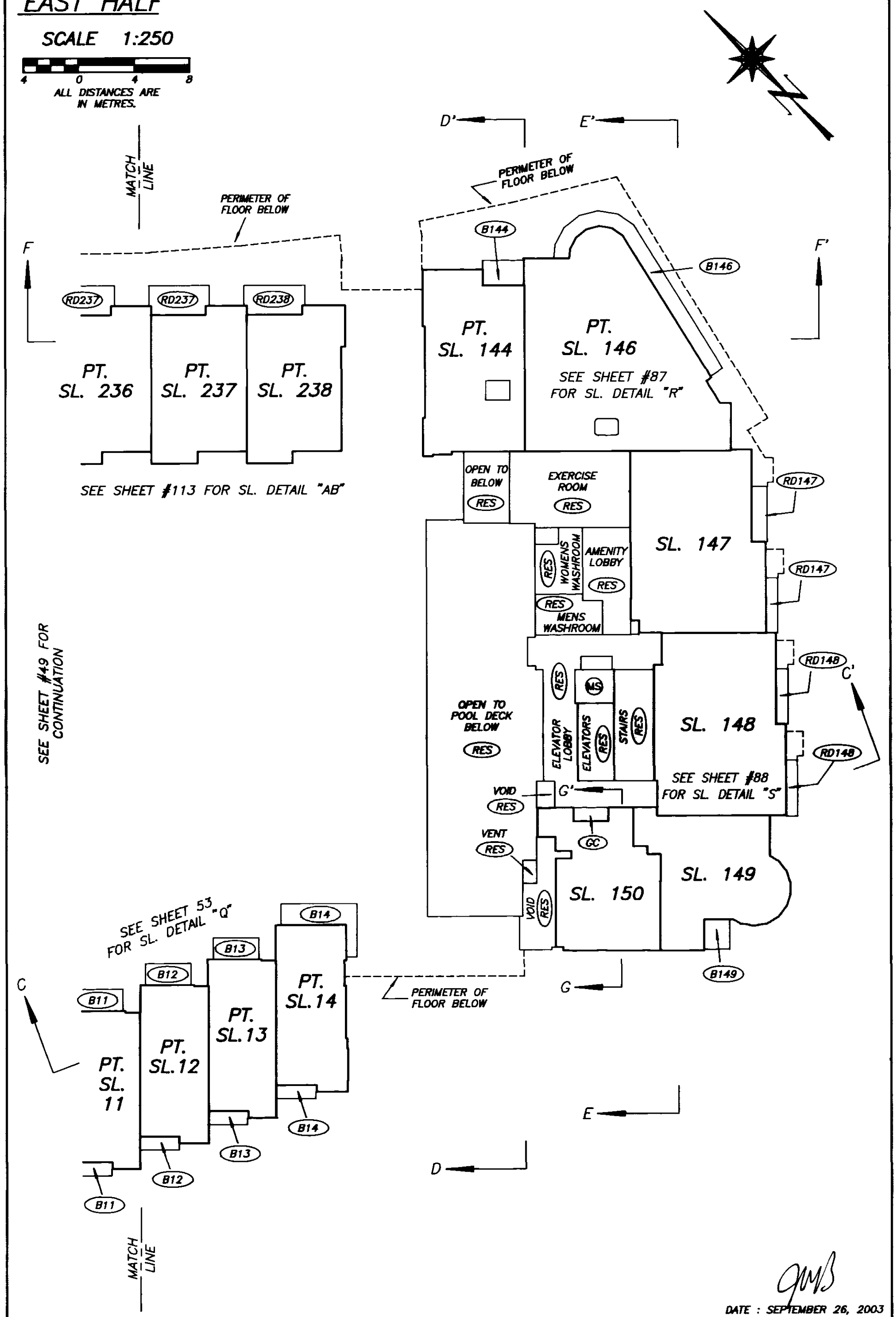

DATE : SEPTEMBER 26, 2003

DRAWING # 30376-10
FILE # 30376-10_L2

FILED VABCS535 M37352 2004-01-02-13.18.56.751200

THIRD LEVEL FLOOR PLAN DETAIL "O"

BUILDING 1

STRATA PLAN BCS 535

SCALE 1:125

2 0 2 4

ALL DISTANCES ARE IN METRES.

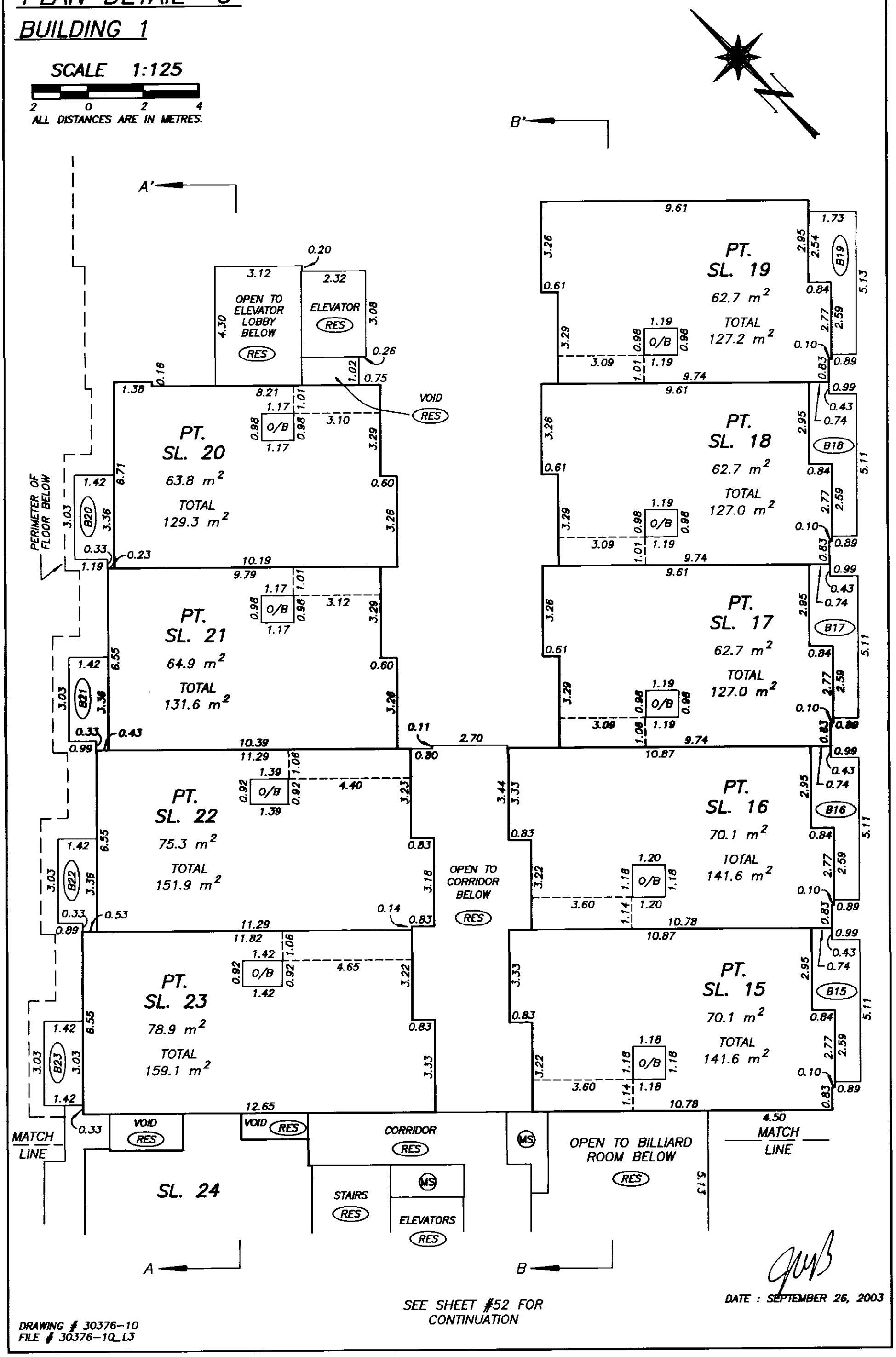

SEE SHEET #52 FOR CONTINUATION

DATE : SEPTEMBER 26, 2003

DRAWING # 30376-10
FILE # 30376-10_L3

FILED VABC535 M37352 2004-01-02-13.18.56.751200

THIRD LEVEL FLOOR PLAN DETAIL "P"

BUILDING 1

STRATA PLAN BCS 535

SCALE 1:125

2 0 2 4

ALL DISTANCES ARE IN METRES.

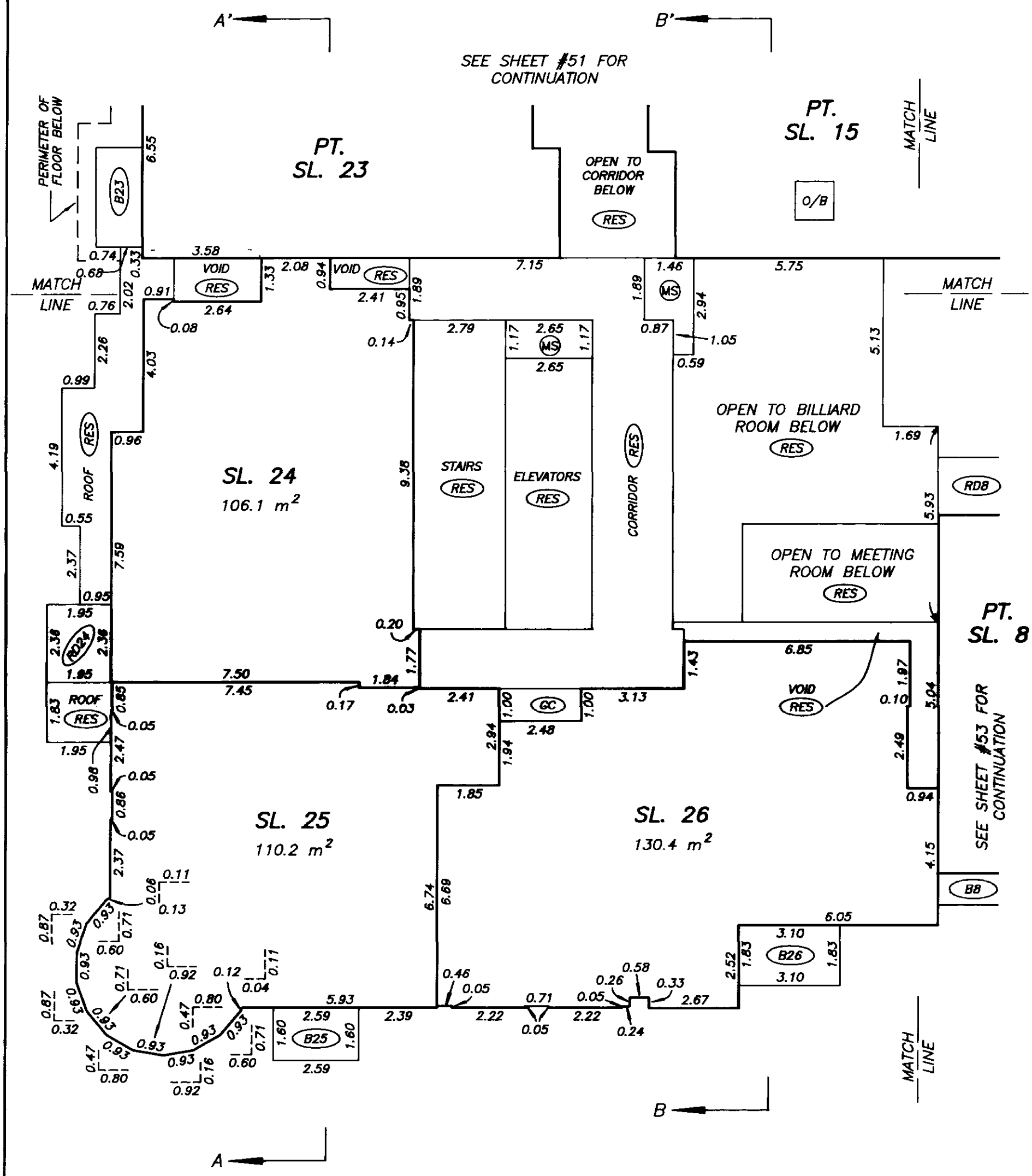

DATE : SEPTEMBER 26, 2003

DRAWING # 30376-10
FILE # 30376-10_L3

FILED VABCS535 M37352 2004-01-02-13.18.56.751200

THIRD LEVEL FLOOR PLAN DETAIL "Q"

BUILDING 1

STRATA PLAN BCS 535

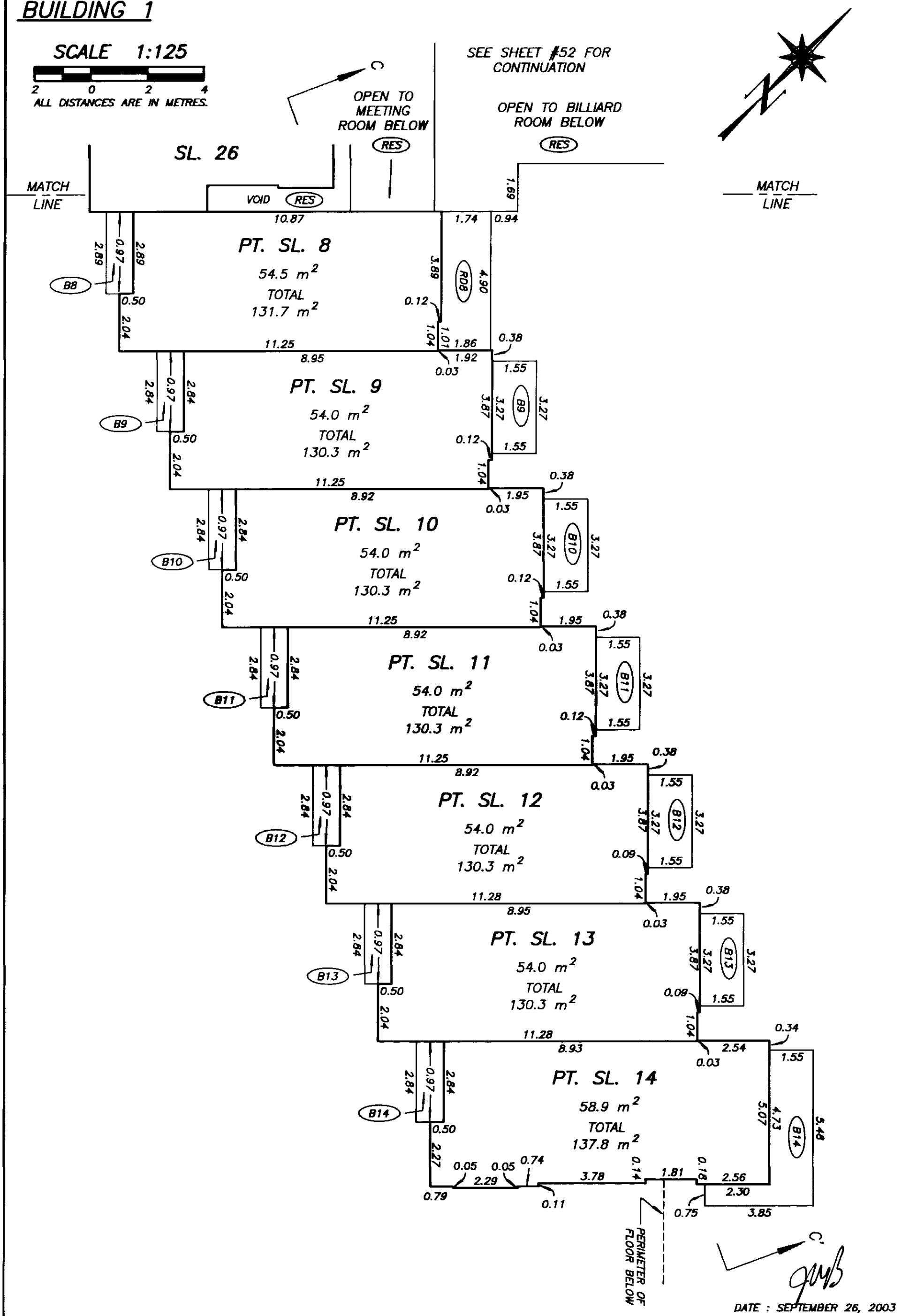

DRAWING # 30376-10
FILE # 30376-10_L3

FILED VABCS535 M37352 2004-01-02-13.18.56.751200

FOURTH LEVEL FLOOR PLAN
WEST HALF

STRATA PLAN BCS 535

SCALE 1:250

4 0 4 8

ALL DISTANCES ARE IN METRES.

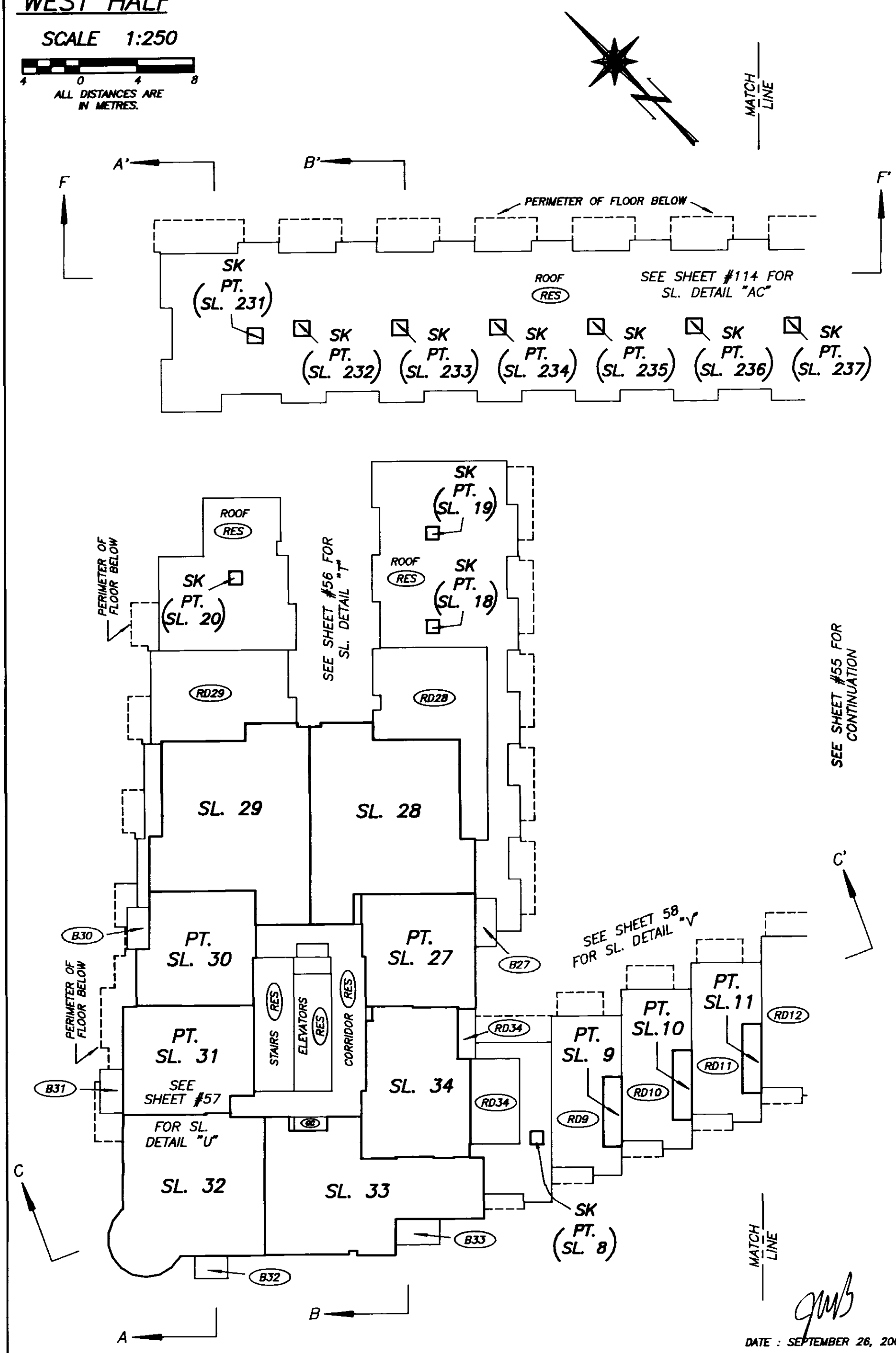

DATE : SEPTEMBER 26, 2003

DRAWING # 30376-10
FILE # 30376-10_L4

FILED VABC5535 M37352 2004-01-02-13.18.56.751200

FOURTH LEVEL FLOOR PLAN
EAST HALF

STRATA PLAN BCS 535

SCALE 1:250

4 0 4 8

ALL DISTANCES ARE IN METRES.

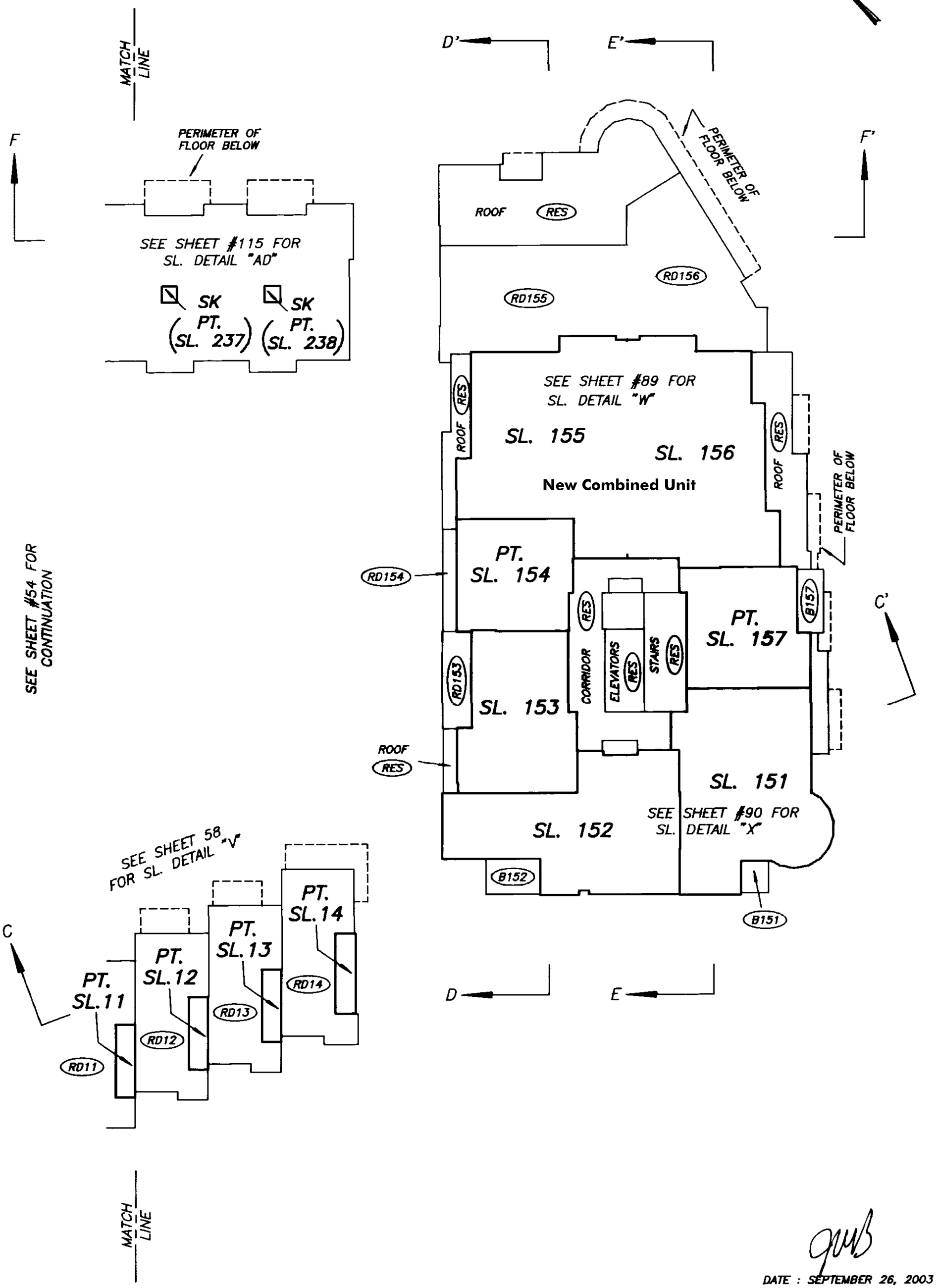

DATE : SEPTEMBER 26, 2003

DRAWING # 30376-10
FILE # 30376-10_L4

FILED VABCS535 M37352 2004-01-02-13.18.56.751200

FOURTH LEVEL FLOOR PLAN DETAIL "T"

BUILDING 1

STRATA PLAN BCS 535

SCALE 1:125

2 0 2 4

ALL DISTANCES ARE IN METRES.

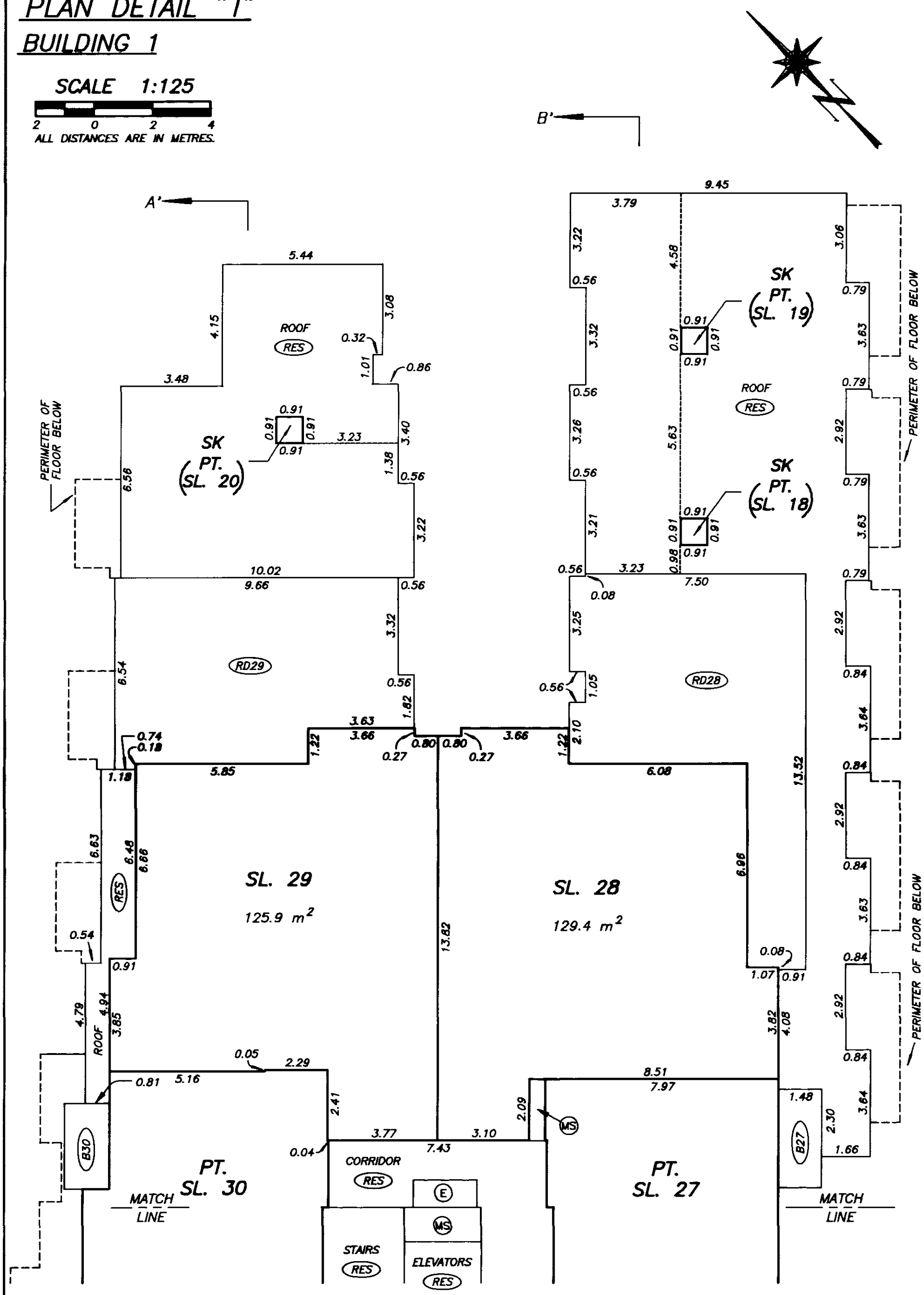

SEE SHEET #57 FOR CONTINUATION

DATE : SEPTEMBER 26, 2003

DRAWING # 30376-10
FILE # 30376-10_L4

FILED VABC5535 M37352 2004-01-02-13.18.56.751200

FOURTH LEVEL FLOOR PLAN DETAIL "U"

BUILDING 1

STRATA PLAN BCS 535

SCALE 1:125

2 0 2 4

ALL DISTANCES ARE IN METRES.

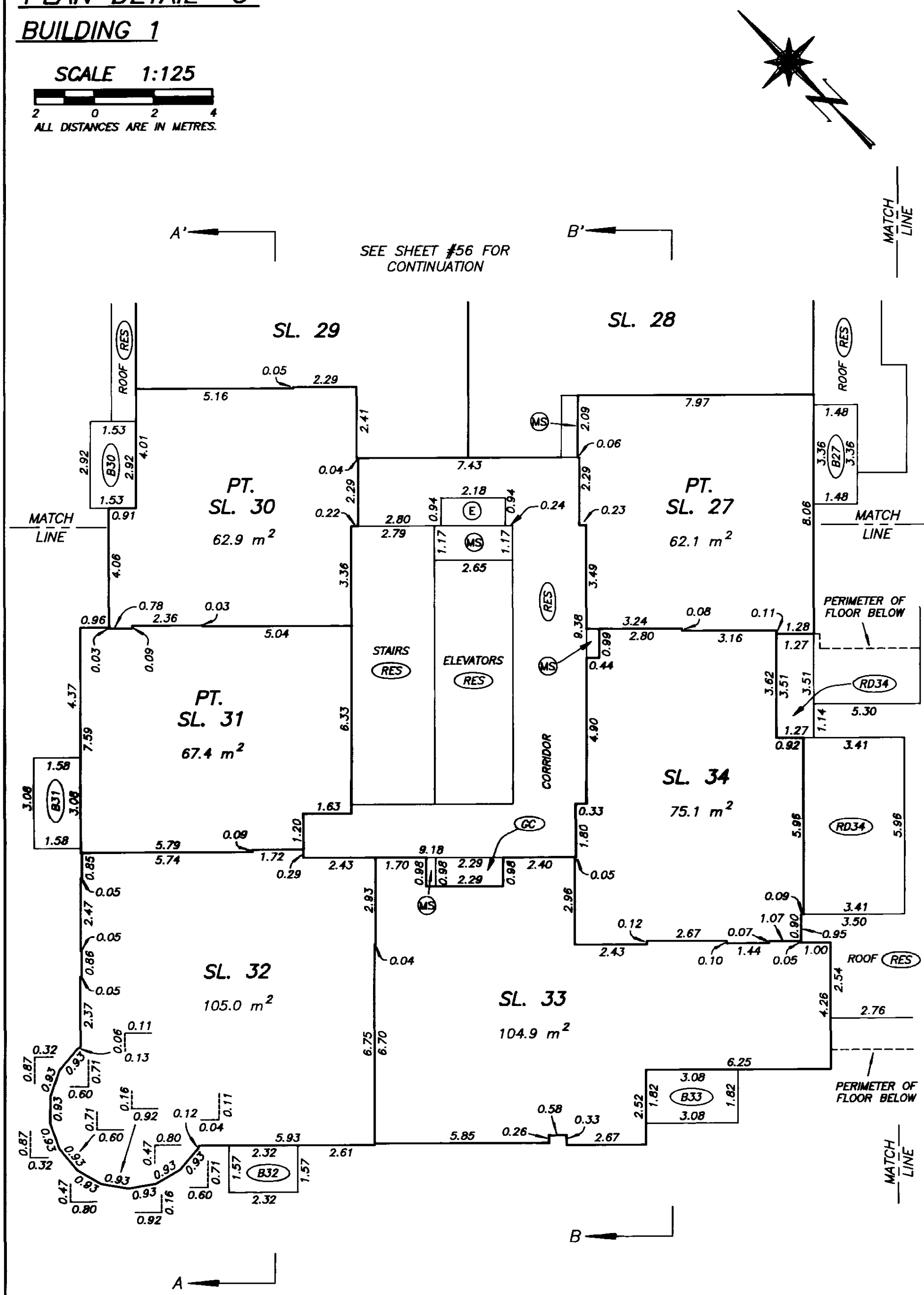

DATE : SEPTEMBER 26, 2003

DRAWING # 30376-10
FILE # 30376-10_L4

FILED VABCS535 M37352 2004-01-02-13.18.56.751200

FOURTH LEVEL FLOOR PLAN DETAIL "V"

BUILDING 1

STRATA PLAN BCS 535

SCALE 1:125

2 0 2 4

ALL DISTANCES ARE IN METRES.

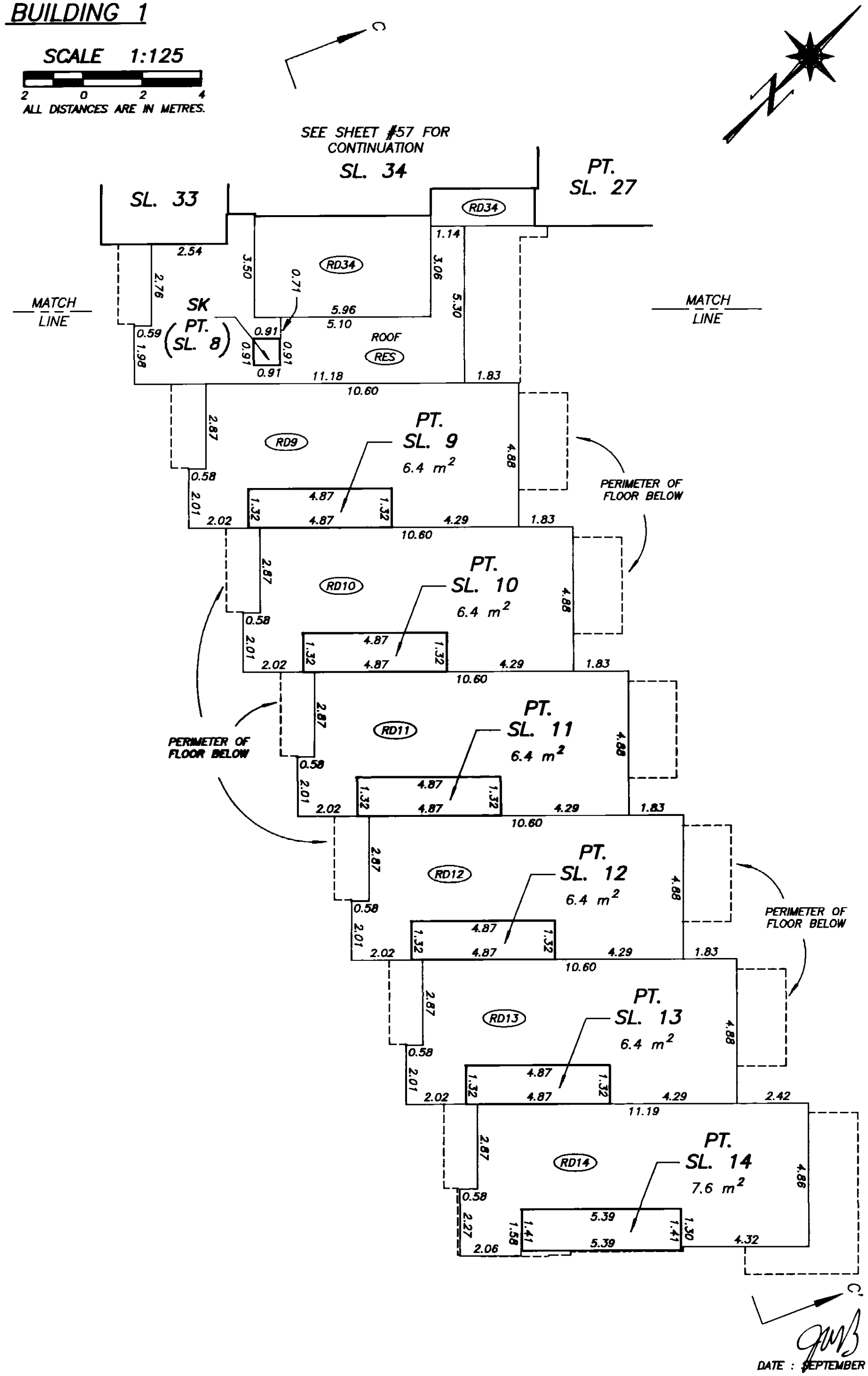

DATE : SEPTEMBER 26, 2003

DRAWING # 30376-10
FILE # 30376-10_L4

FILED VABCS535 M37352 2004-01-02-13.18.56.751200

FIFTH LEVEL FLOOR PLAN

BUILDING 1

STRATA PLAN BCS 535

SCALE 1:125

2 0 2 4

ALL DISTANCES ARE IN METRES.

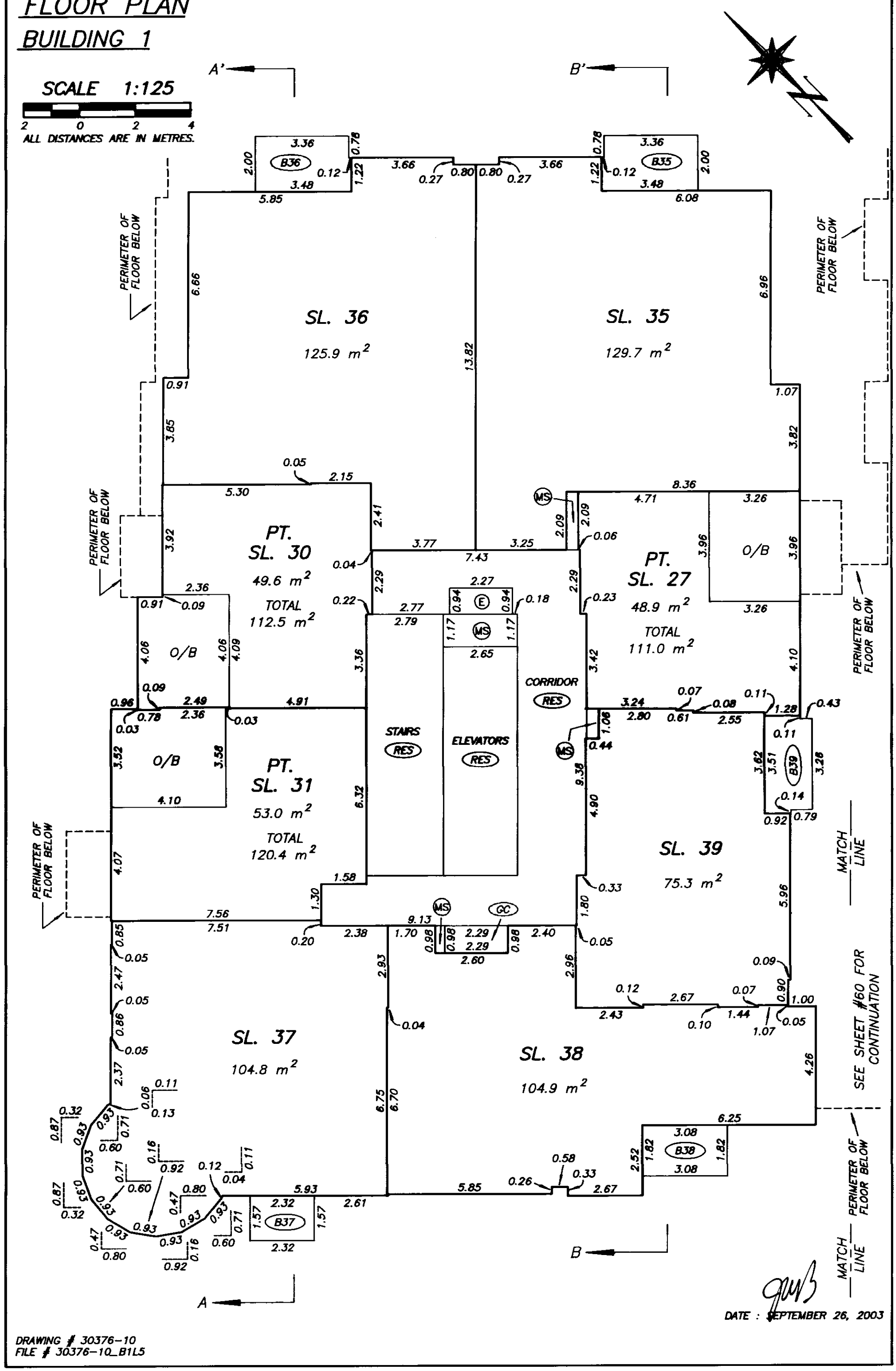

DATE : SEPTEMBER 26, 2003

DRAWING # 30376-10
FILE # 30376-10_B1L5

FILED VABCS535 M37352 2004-01-02-13.18.56.751200

FIFTH LEVEL FLOOR PLAN

BUILDING 1

STRATA PLAN BCS 535

SCALE 1:125

2 0 2 4

ALL DISTANCES ARE IN METRES.

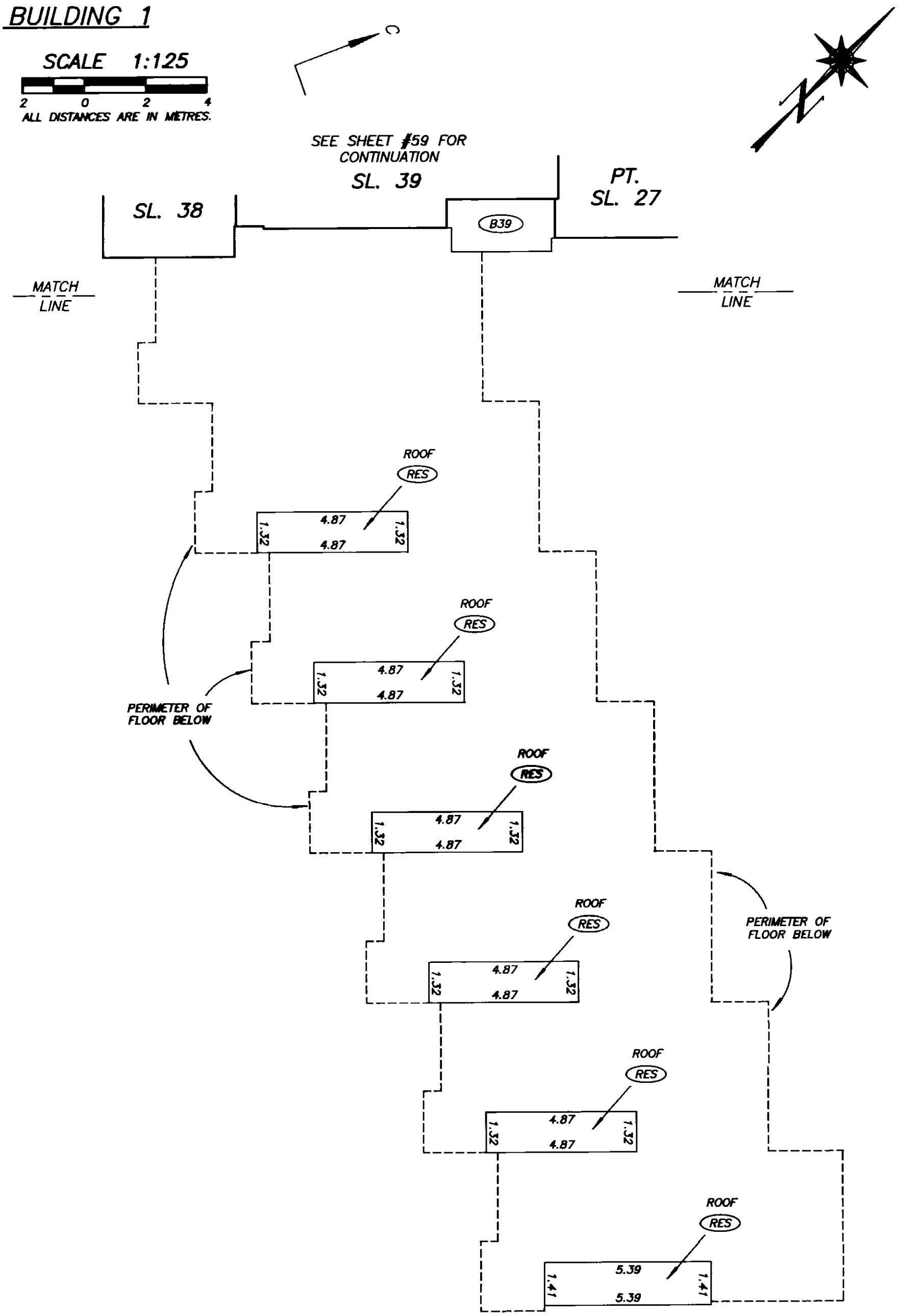

DATE : SEPTEMBER 26, 2003

DRAWING # 30376-10
FILE # 30376-10_B1L5

FILED VABCS535 M37352 2004-01-02-13.18.56.751200

SIXTH LEVEL FLOOR PLAN

BUILDING 1

STRATA PLAN BCS 535

SCALE 1:125

2 0 2 4

ALL DISTANCES ARE IN METRES.

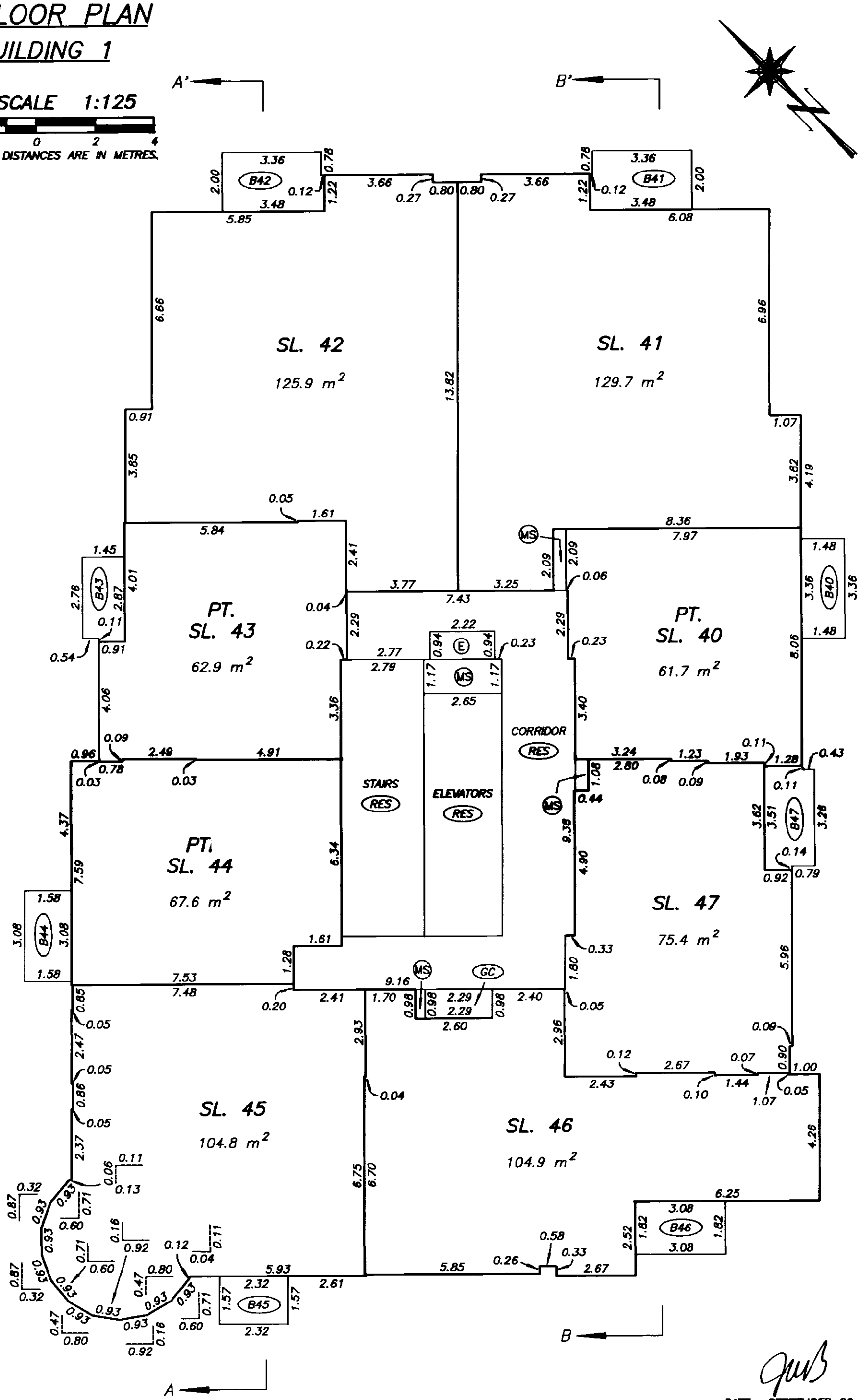

DATE : SEPTEMBER 26, 2003

DRAWING # 30376-10
FILE # 30376-10_B1L6

FILED VABCS535 M37352 2004-01-02-13.18.56.751200

SEVENTH LEVEL FLOOR PLAN

BUILDING 1

STRATA PLAN BCS 535

SCALE 1:125

2 0 2 4

ALL DISTANCES ARE IN METRES.

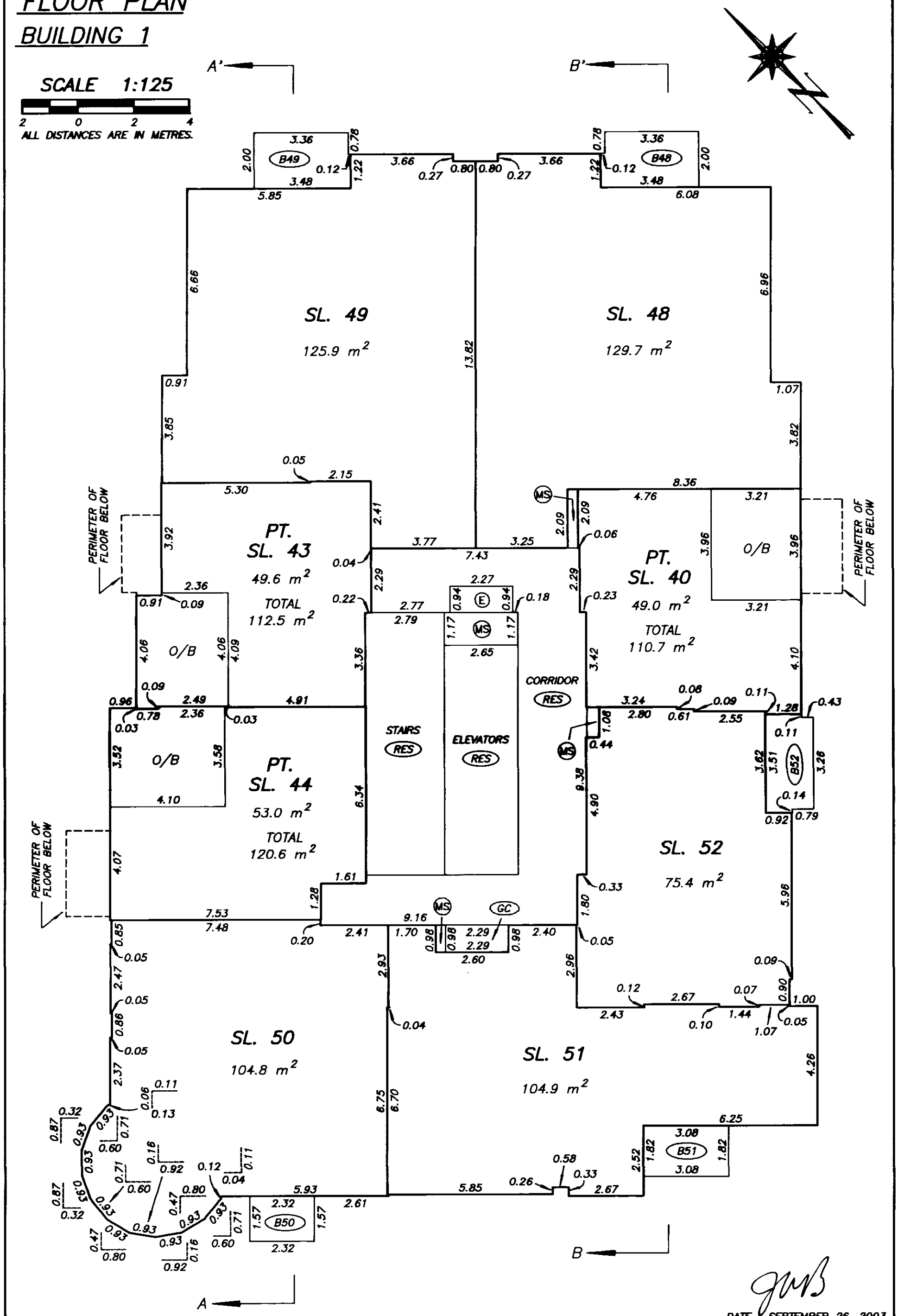

DATE : SEPTEMBER 26, 2003

DRAWING # 30376-10
FILE # 30376-10_B1L7

FILED VABCS535 M37352 2004-01-02-13.18.56.751200

EIGHTH LEVEL FLOOR PLAN
BUILDING 1

STRATA PLAN BCS 535

SCALE 1:125

2 0 2 4

ALL DISTANCES ARE IN METRES.

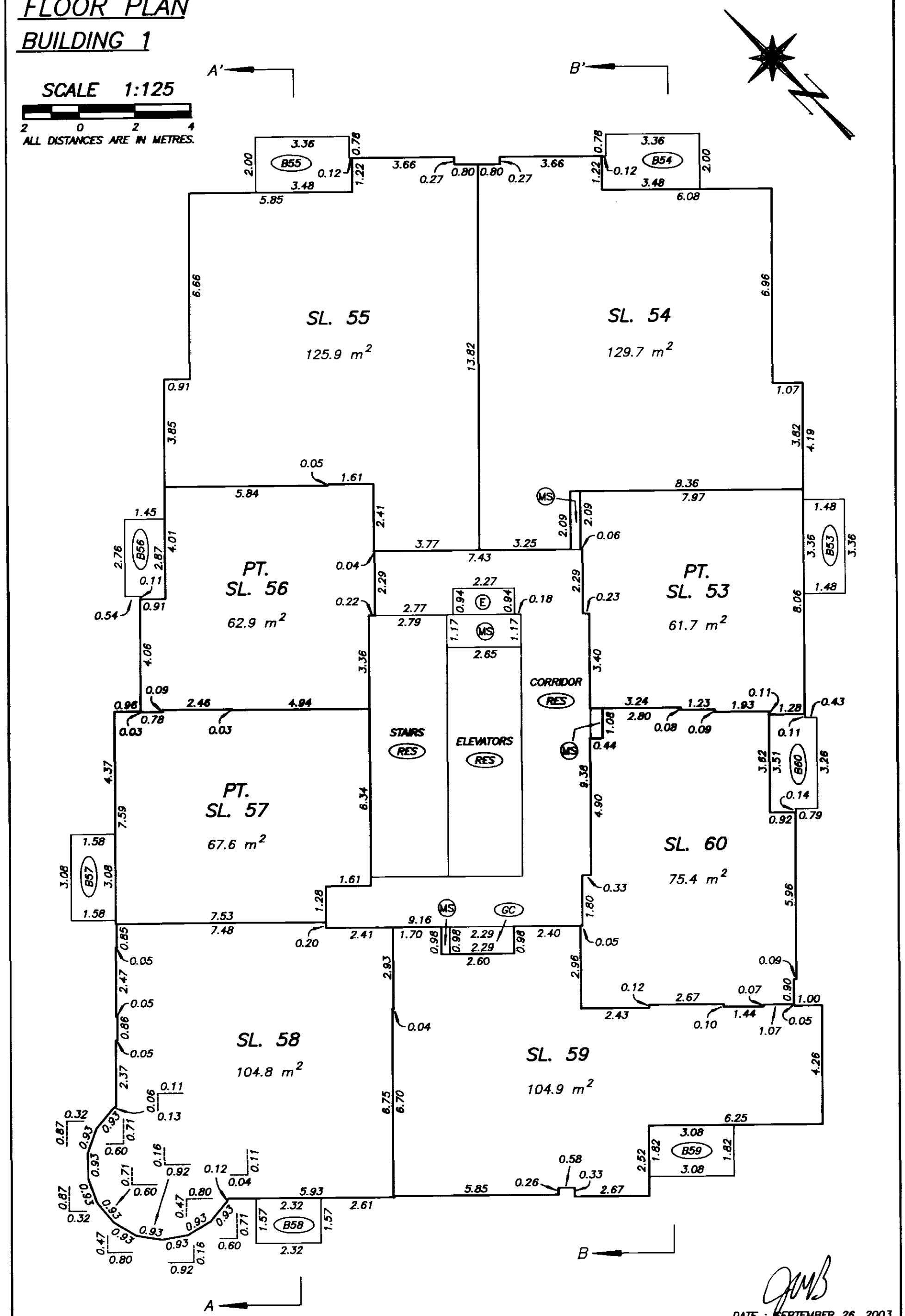

DATE : SEPTEMBER 26, 2003

DRAWING # 30376-10
FILE # 30376-10_B1L8

FILED VABCS535 M37352 2004-01-02-13.18.56.751200

NINTH LEVEL FLOOR PLAN

BUILDING 1

STRATA PLAN BCS 535

SCALE 1:125

2 0 2 4

ALL DISTANCES ARE IN METRES.

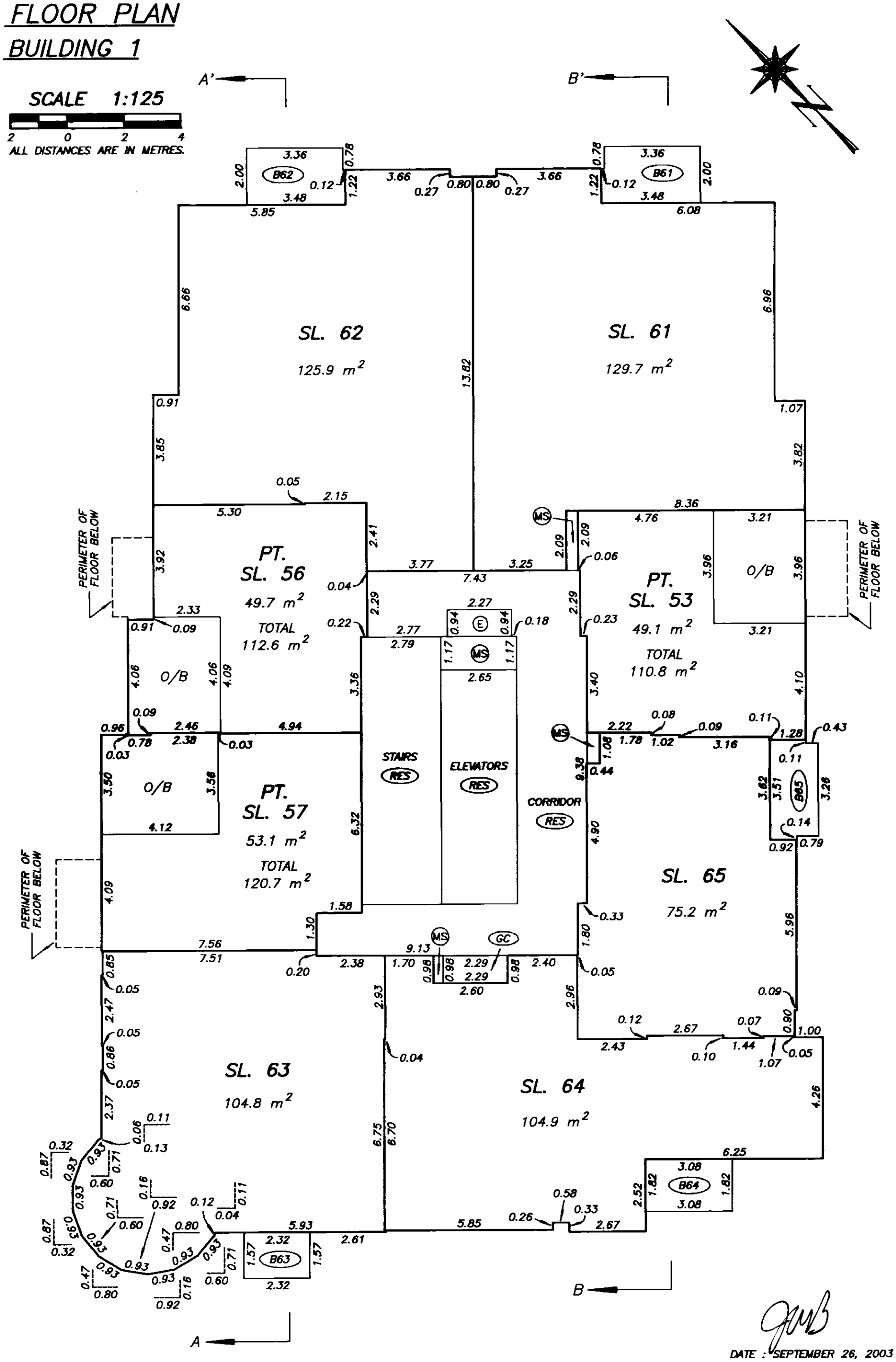

DATE : SEPTEMBER 26, 2003

DRAWING # 30376-10
FILE # 30376-10_B1L9

FILED VABC5535 M37352 2004-01-02-13.18.56.751200

TENTH LEVEL FLOOR PLAN

BUILDING 1

STRATA PLAN BCS 535

SCALE 1:125

2 0 2 4

ALL DISTANCES ARE IN METRES.

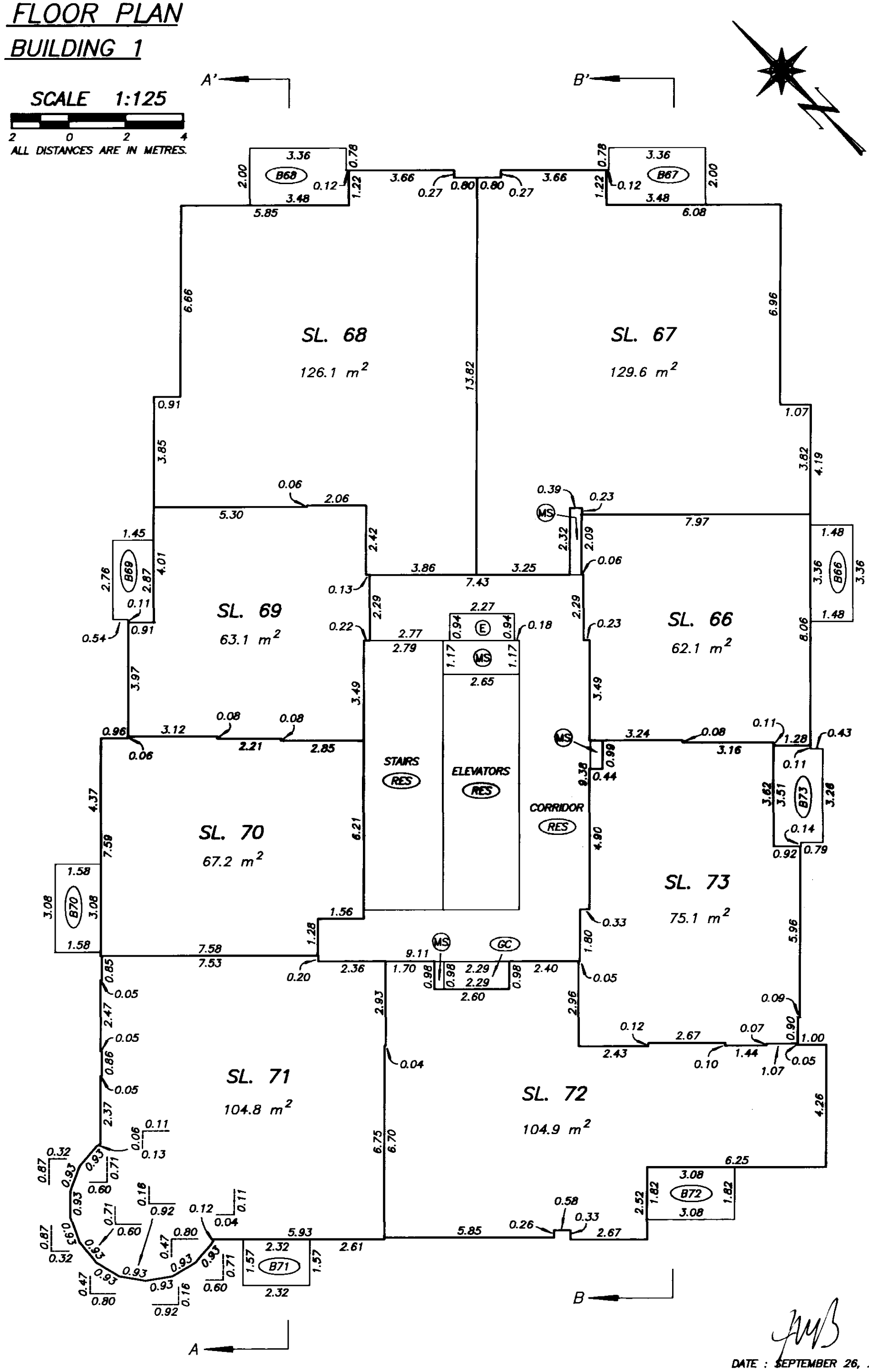

DATE : SEPTEMBER 26, 2003

DRAWING # 30376-10
FILE # 30376-10_B1L10

FILED VABCS535 M37352 2004-01-02-13.18.56.751200

ELEVENTH LEVEL FLOOR PLAN

BUILDING 1

STRATA PLAN BCS 535

SCALE 1:125

2 0 2 4

ALL DISTANCES ARE IN METRES.

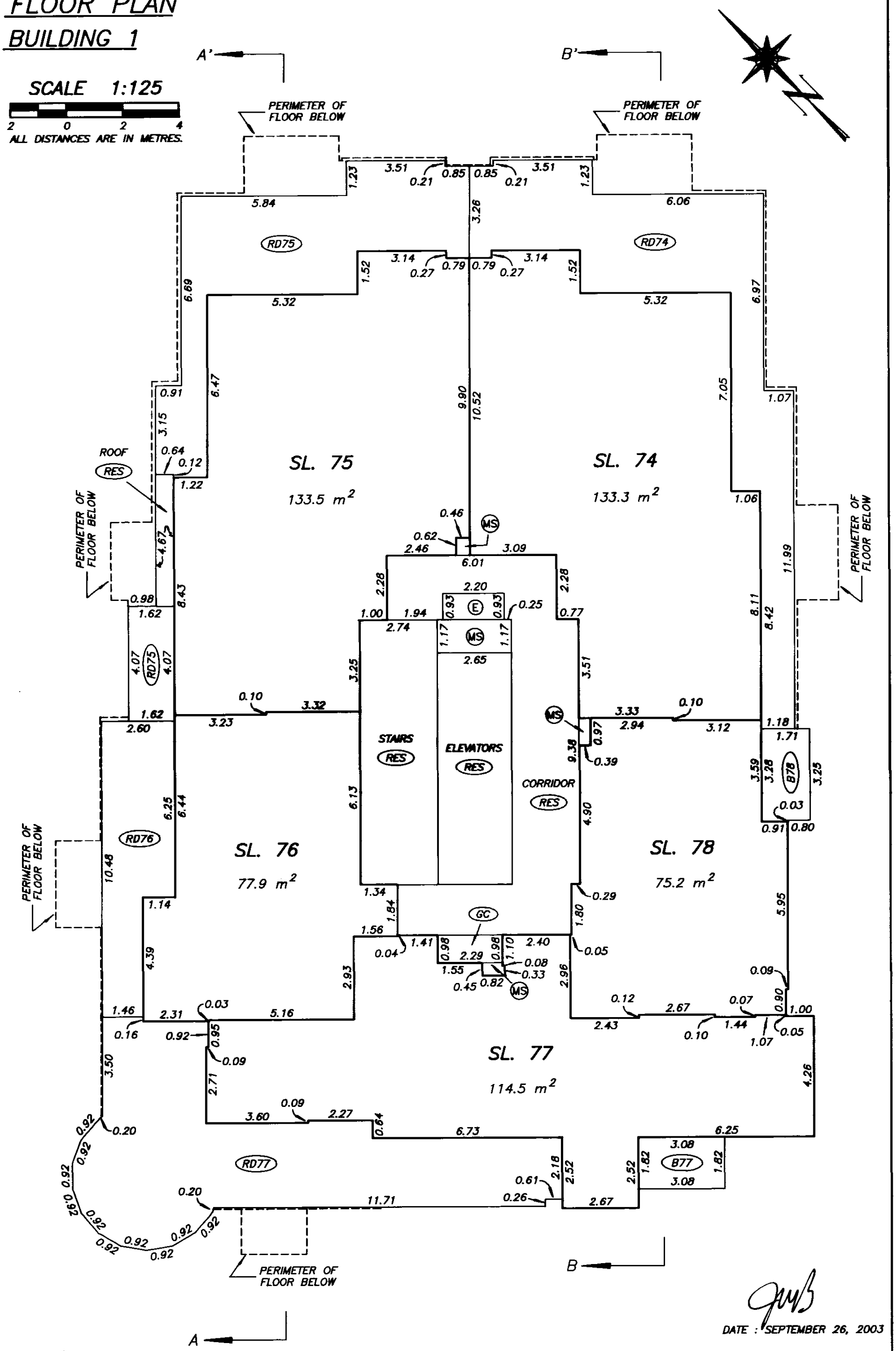

DATE : SEPTEMBER 26, 2003

DRAWING # 30376-10
FILE # 30376-10_B1L11

FILED VABC535 M37352 2004-01-02-13.18.56.751200

TWELFTH LEVEL FLOOR PLAN

BUILDING 1

STRATA PLAN BCS 535

SCALE 1:125

2 0 2 4

ALL DISTANCES ARE IN METRES.

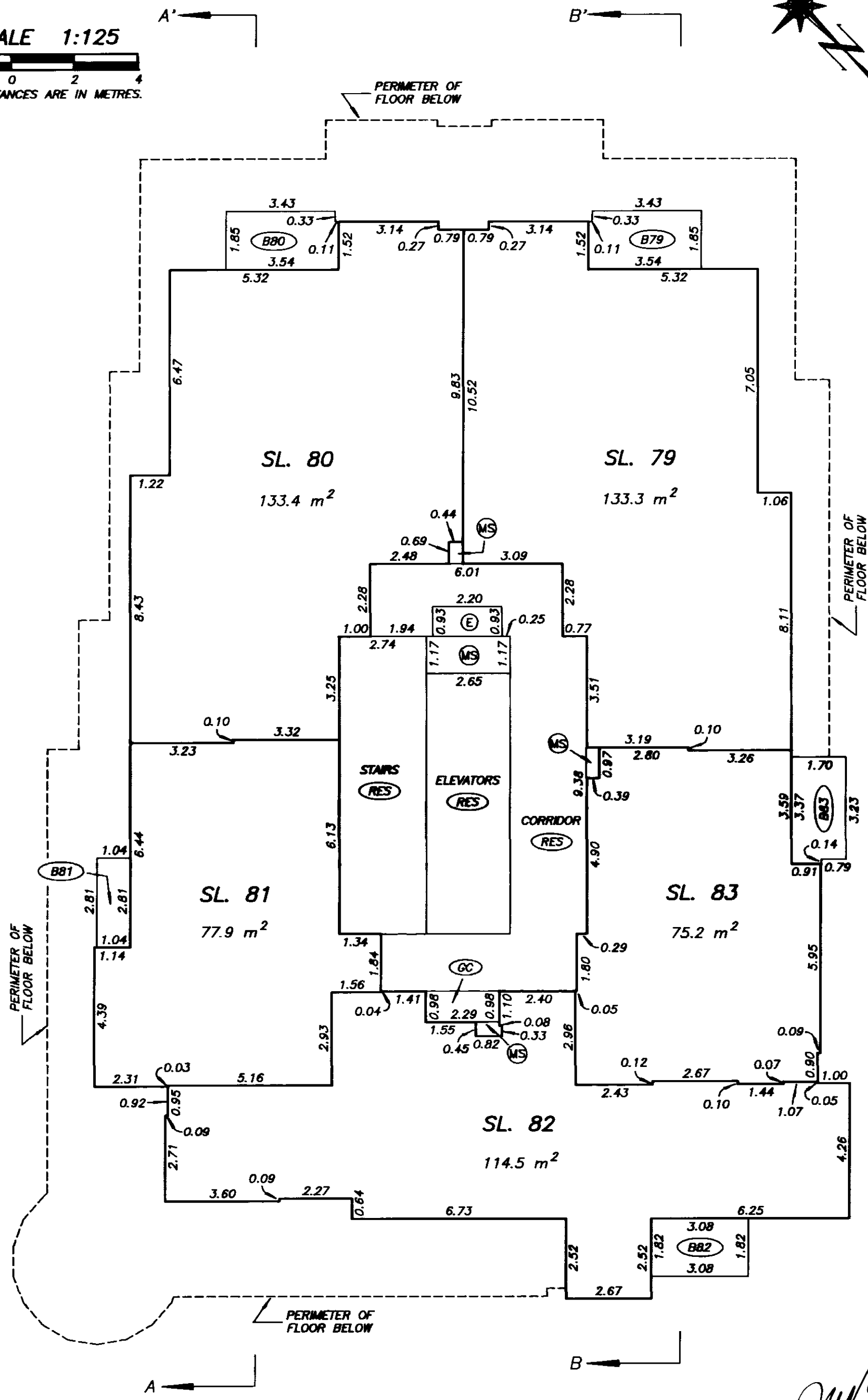

DATE : SEPTEMBER 26, 2003

DRAWING # 30376-10
FILE # 30376-10_B1L12

FILED VABCS535 M37352 2004-01-02-13.18.56.751200

THIRTEENTH LEVEL FLOOR PLAN

BUILDING 1

STRATA PLAN BCS 535

SCALE 1:125

2 0 2 4

ALL DISTANCES ARE IN METRES.

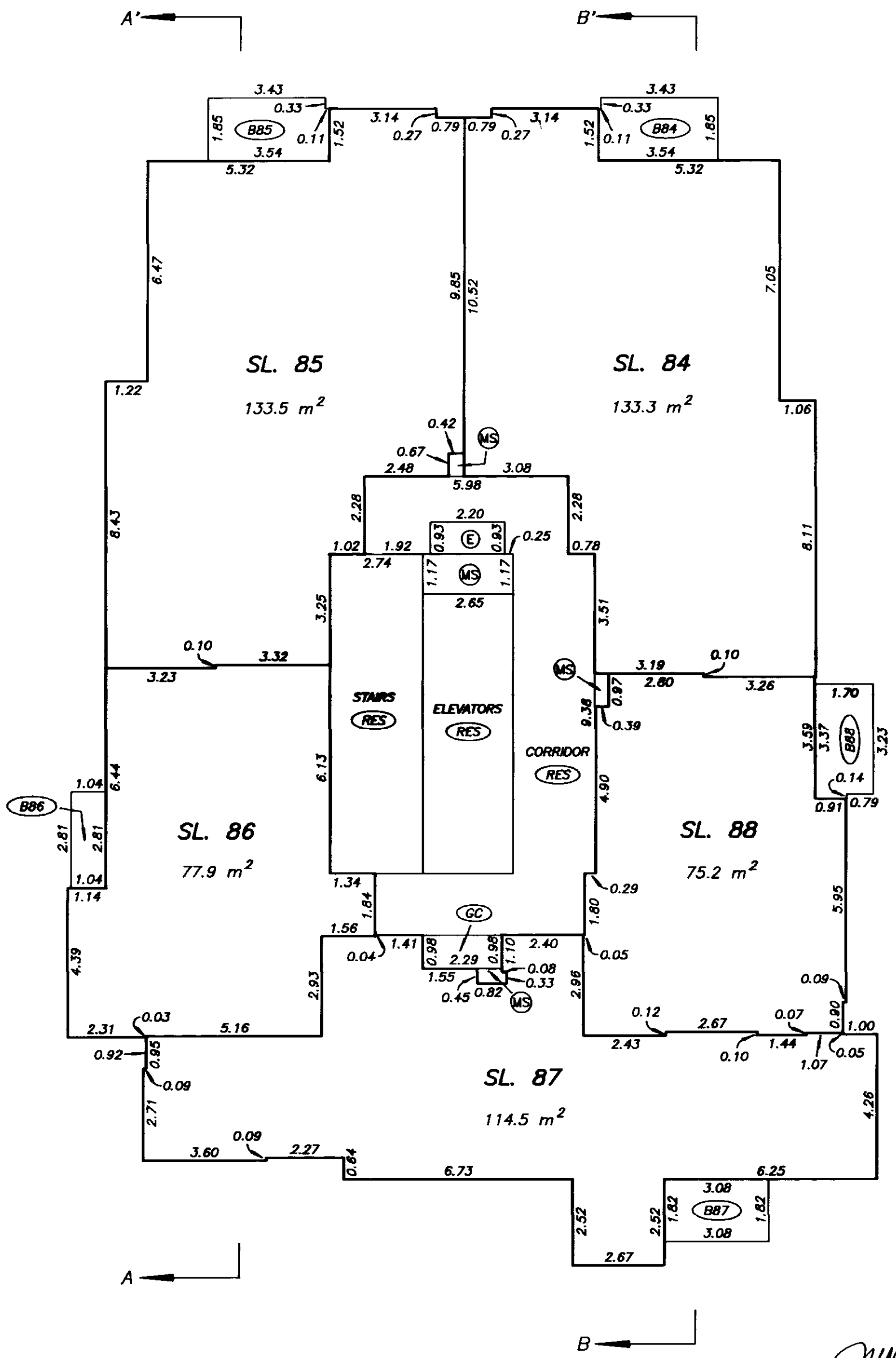

DATE SEPTEMBER 26, 2003

DRAWING # 30376-10
FILE # 30376-10_B1L13

FILED VABCS535 M37352 2004-01-02-13.18.56.751200

FOURTEENTH LEVEL FLOOR PLAN

BUILDING 1

STRATA PLAN BCS 535

SCALE 1:125

2 0 2 4

ALL DISTANCES ARE IN METRES.

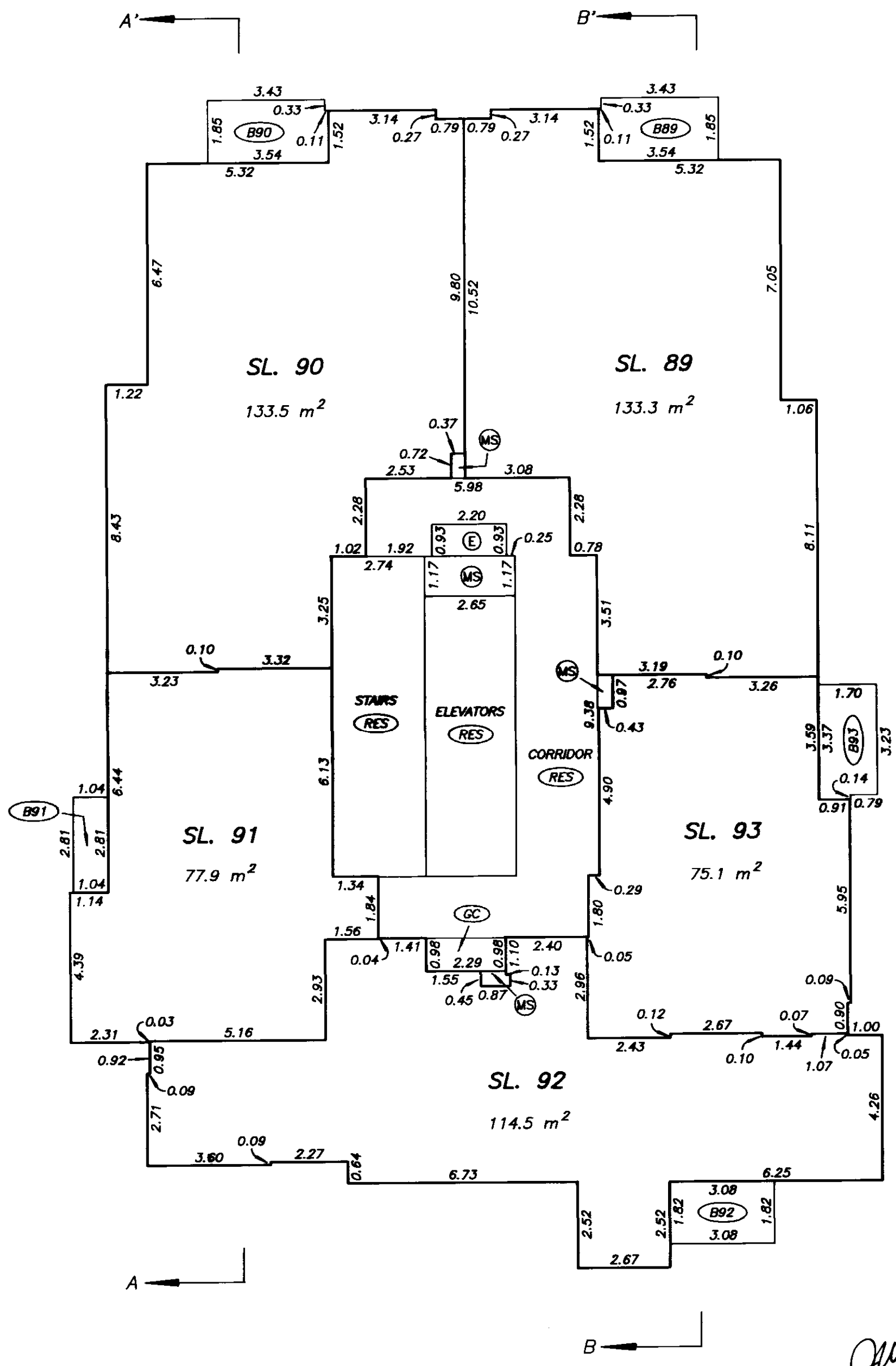

DATE : SEPTEMBER 26, 2003

DRAWING # 30376-10
FILE # 30376-10_B1L14

FILED VABC5535 M37352 2004-01-02-13.18.56.751200

FIFTEENTH LEVEL FLOOR PLAN

BUILDING 1

STRATA PLAN BCS 535

SCALE 1:125

2 0 2 4

ALL DISTANCES ARE IN METRES.

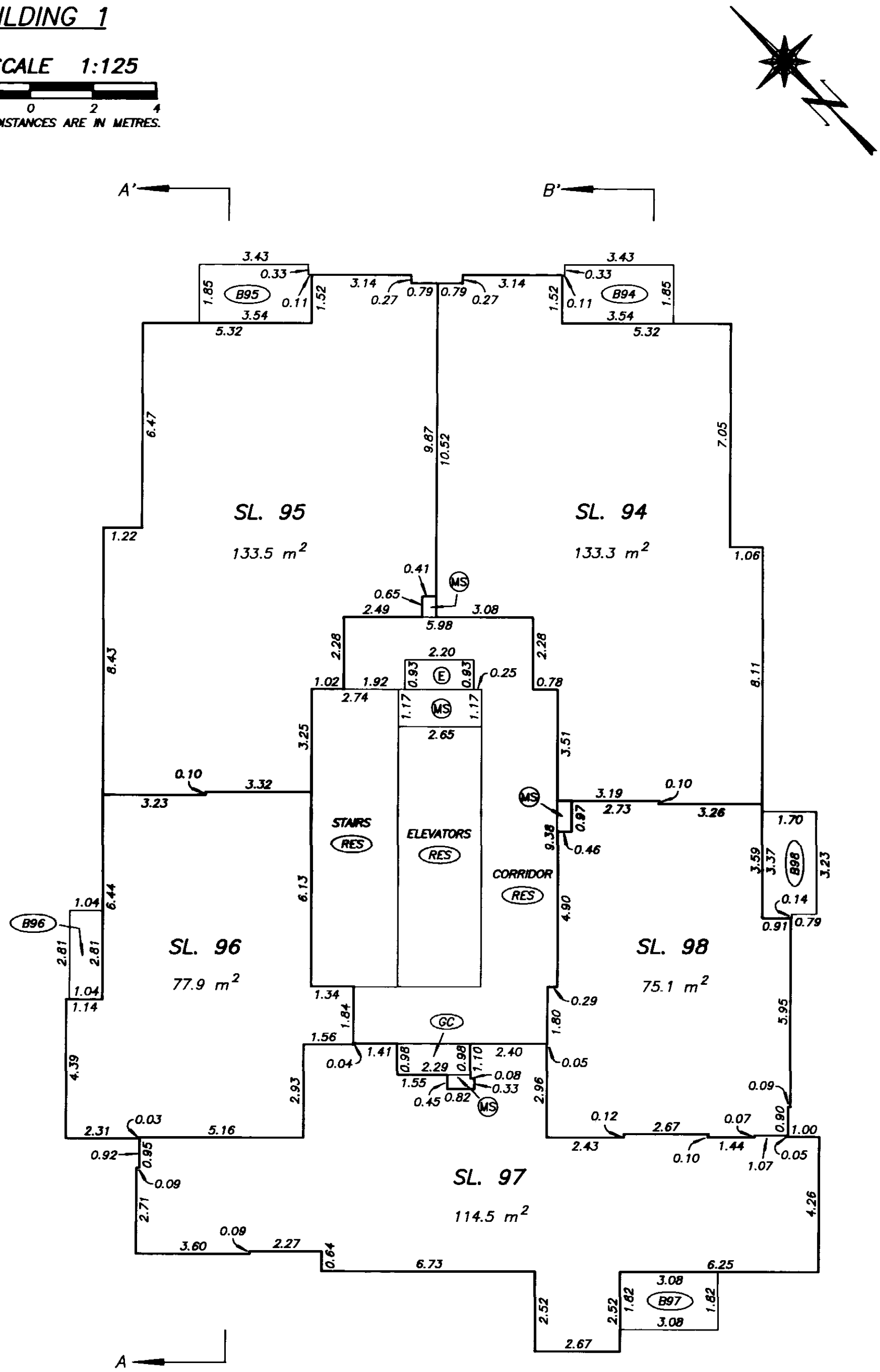

DATE : SEPTEMBER 26, 2003

DRAWING # 30376-10
FILE # 30376-10_B1L15

FILED VABCS535 M37352 2004-01-02-13.18.56.751200

SIXTEENTH LEVEL FLOOR PLAN

BUILDING 1

STRATA PLAN BCS 535

SCALE 1:125

2 0 2 4

ALL DISTANCES ARE IN METRES.

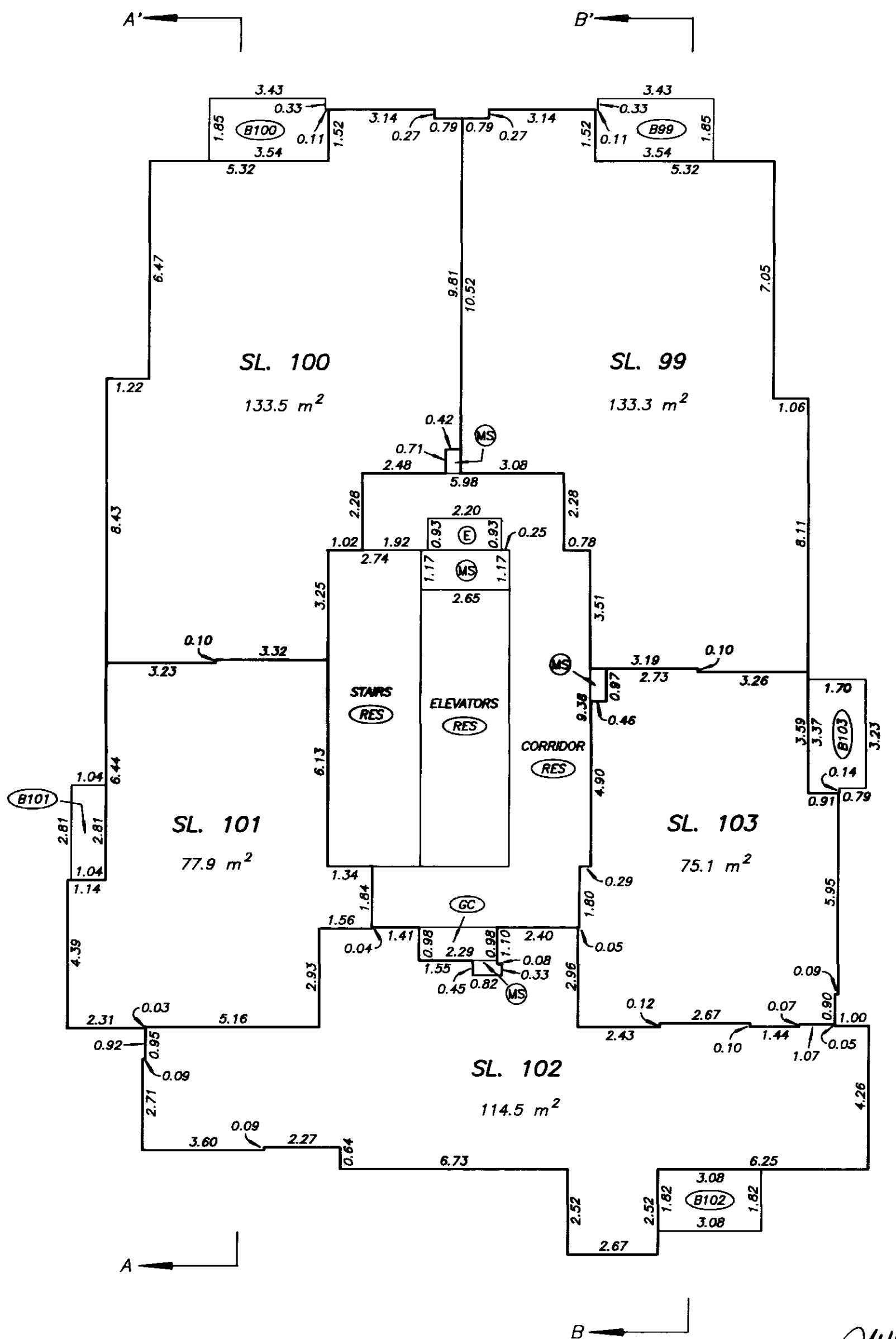

DATE : SEPTEMBER 26, 2003

DRAWING # 30376-10
FILE # 30376-10_B1L16

FILED VABCS535 M37352 2004-01-02-13.18.56.751200

SEVENTEENTH LEVEL FLOOR PLAN

BUILDING 1

STRATA PLAN BCS 535

SCALE 1:125

2 0 2 4

ALL DISTANCES ARE IN METRES.

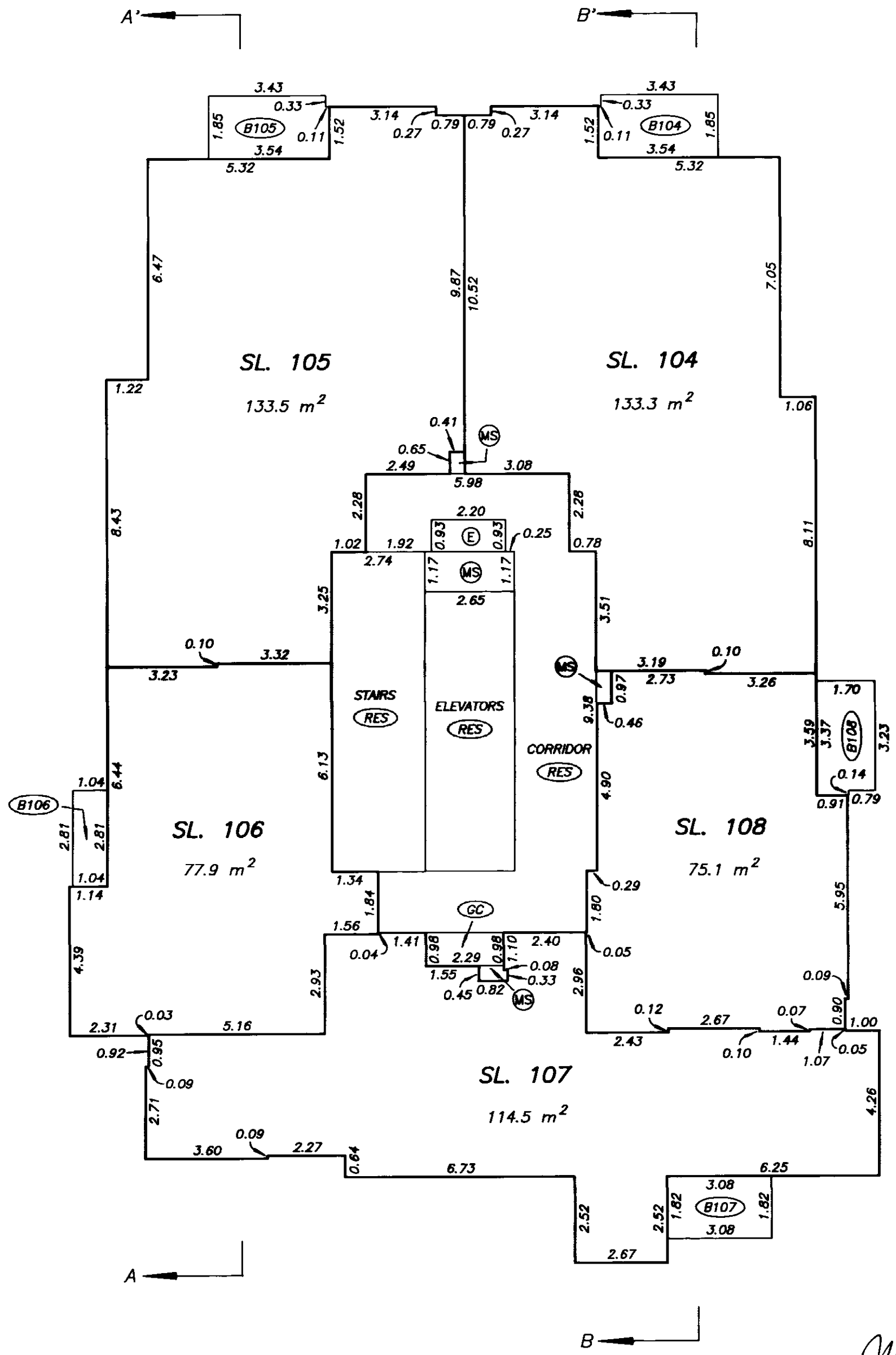

DATE : SEPTEMBER 26, 2003

DRAWING # 30376-10
FILE # 30376-10_B1L17

FILED VABCS535 M37352 2004-01-02-13.18.56.751200

EIGHTEENTH LEVEL FLOOR PLAN

BUILDING 1

STRATA PLAN BCS 535

SCALE 1:125

2 0 2 4

ALL DISTANCES ARE IN METRES.

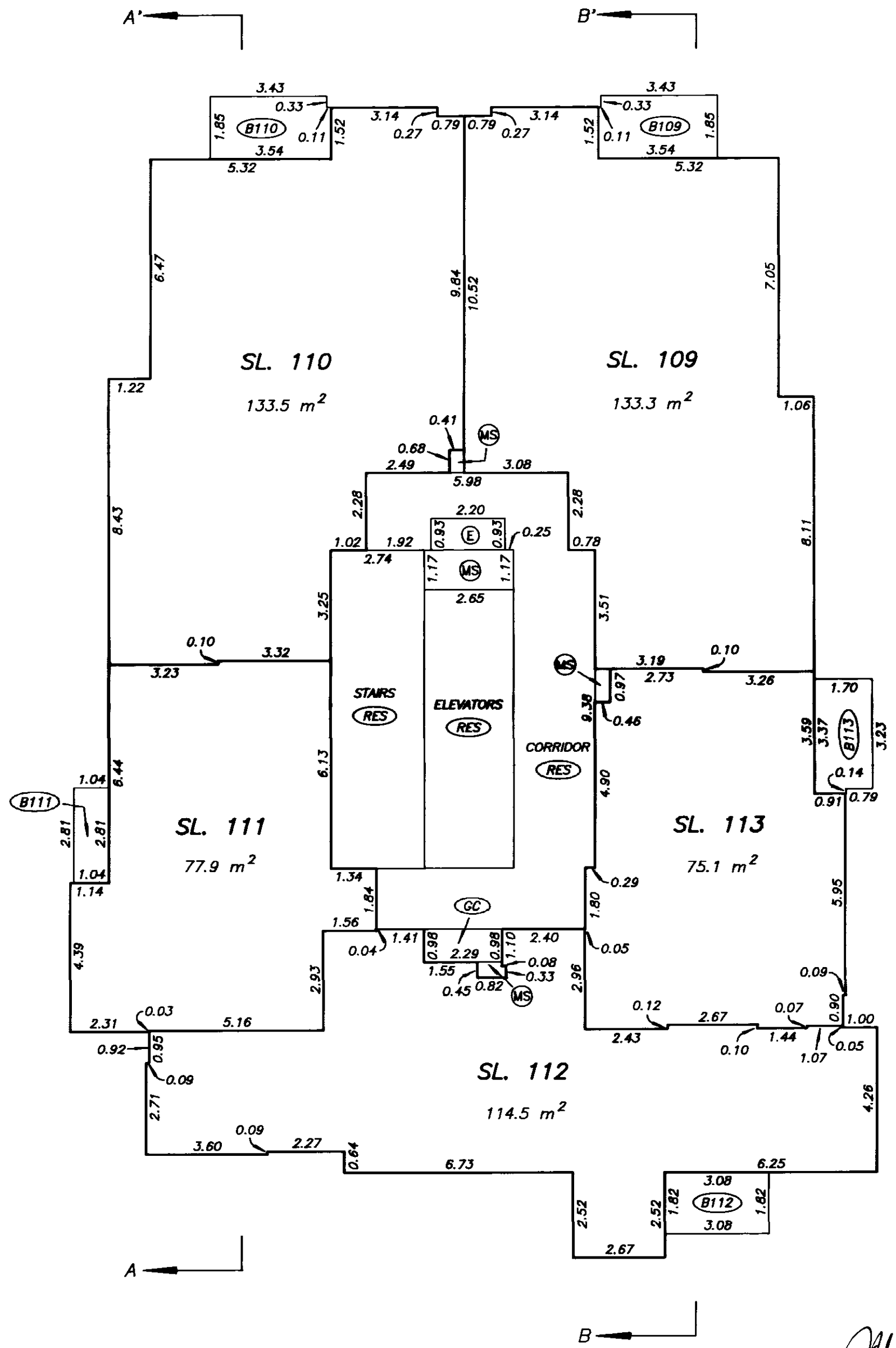

DATE : SEPTEMBER 26, 2003

DRAWING # 30376-10
FILE # 30376-10_B1L18

FILED VABCS535 M37352 2004-01-02-13.18.56.751200

NINETEENTH LEVEL FLOOR PLAN

BUILDING 1

STRATA PLAN BCS 535

SCALE 1:125

2 0 2 4

ALL DISTANCES ARE IN METRES.

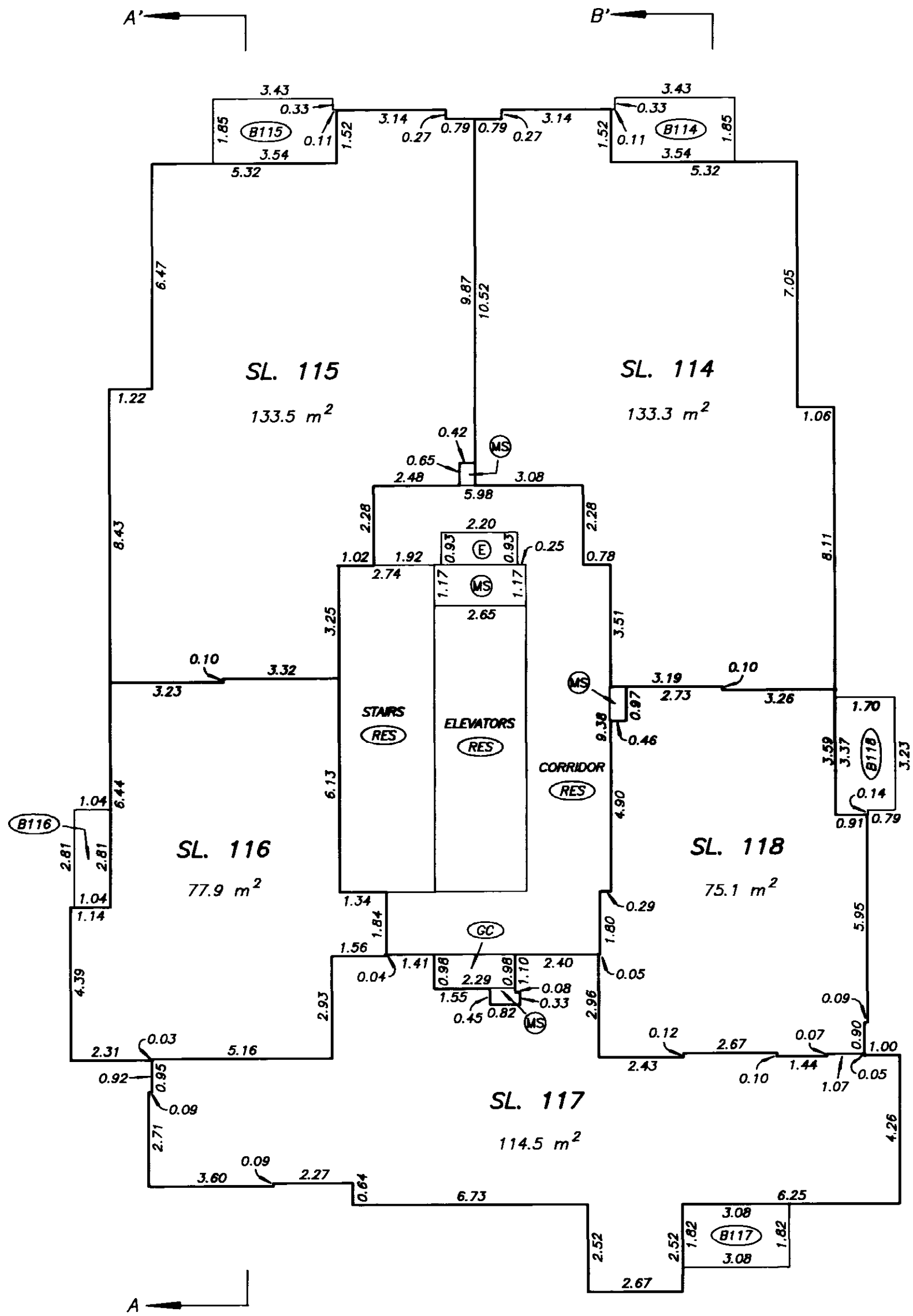

DATE SEPTEMBER 26, 2003

DRAWING # 30376-10
FILE # 30376-10_B1L19

FILED VABC5535 M37352 2004-01-02-13.18.56.751200

TWENTIETH LEVEL FLOOR PLAN

BUILDING 1

STRATA PLAN BCS 535

SCALE 1:125

2 0 2 4

ALL DISTANCES ARE IN METRES.

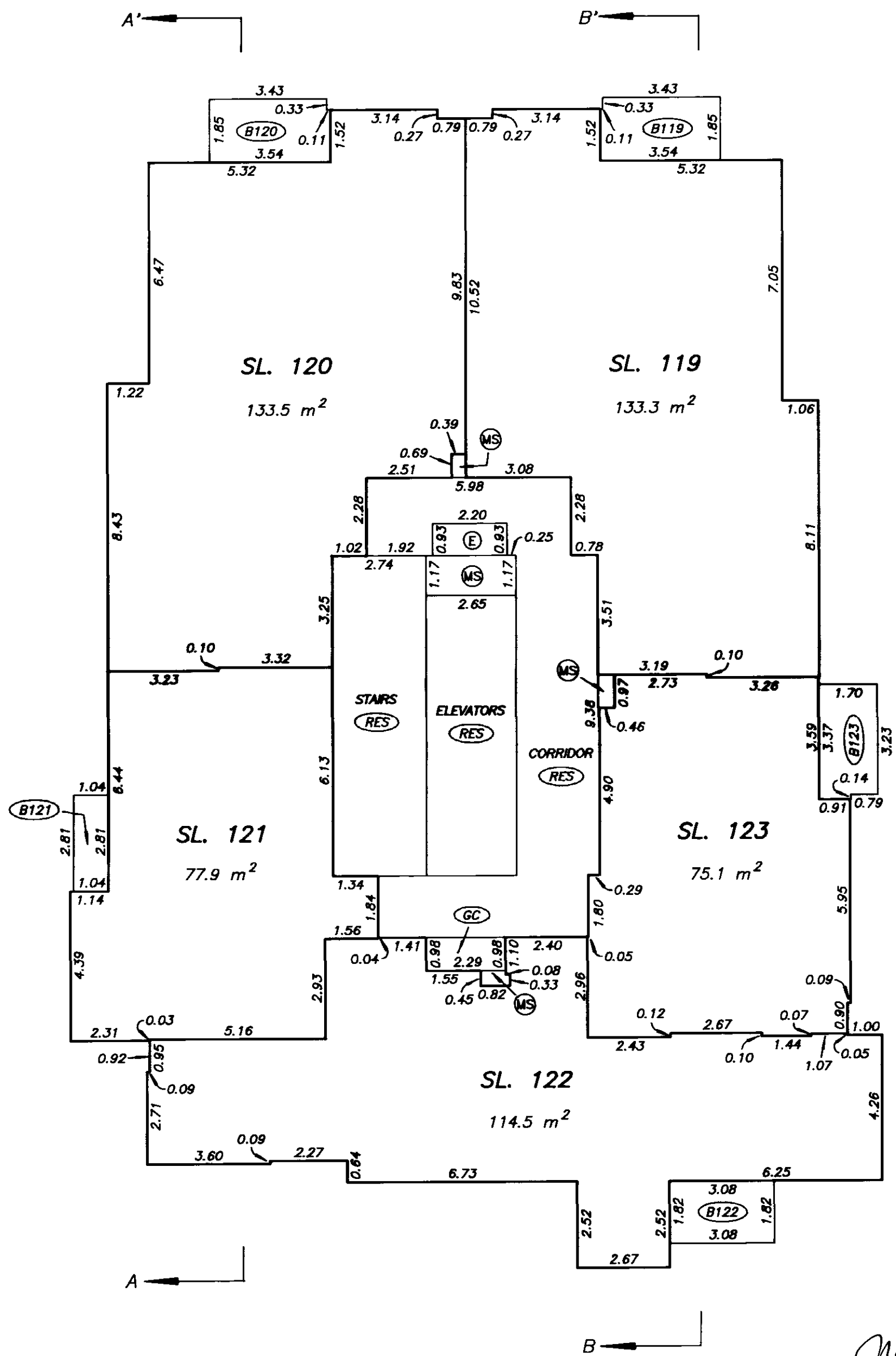

DATE : SEPTEMBER 26, 2003

DRAWING # 30376-10
FILE # 30376-10_B1L20

FILED VABC5535 M37352 2004-01-02-13.18.56.751200

TWENTY FIRST LEVEL FLOOR PLAN

BUILDING 1

STRATA PLAN BCS 535

SCALE 1:125

2 0 2 4

ALL DISTANCES ARE IN METRES.

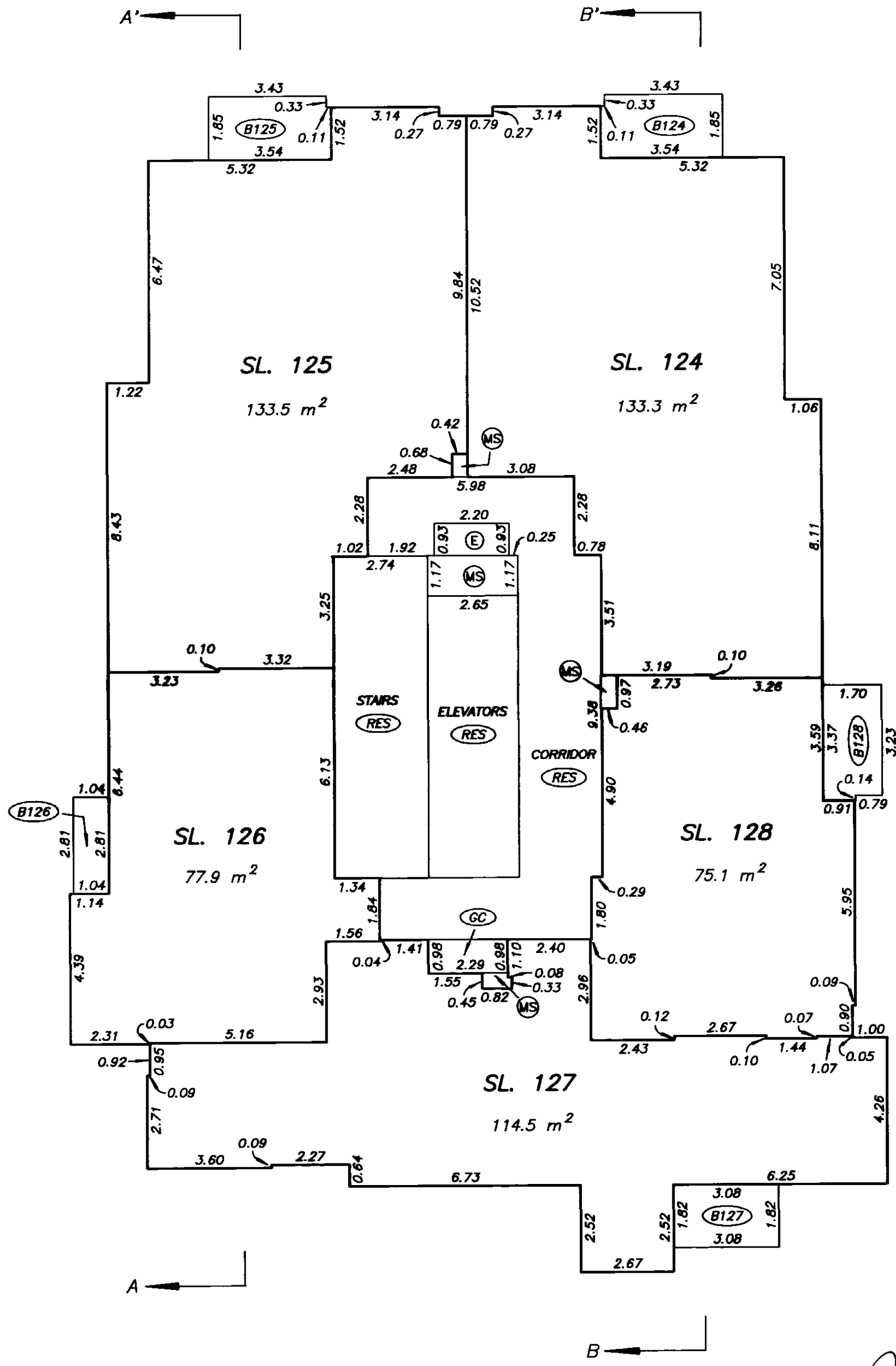

DATE : SEPTEMBER 26, 2003

DRAWING # 30376-10
FILE # 30376-10_B1L21

FILED VABC535 M37352 2004-01-02-13.18.56.751200

TWENTY SECOND LEVEL FLOOR PLAN

BUILDING 1

STRATA PLAN BCS 535

SCALE 1:125

2 0 2 4

ALL DISTANCES ARE IN METRES.

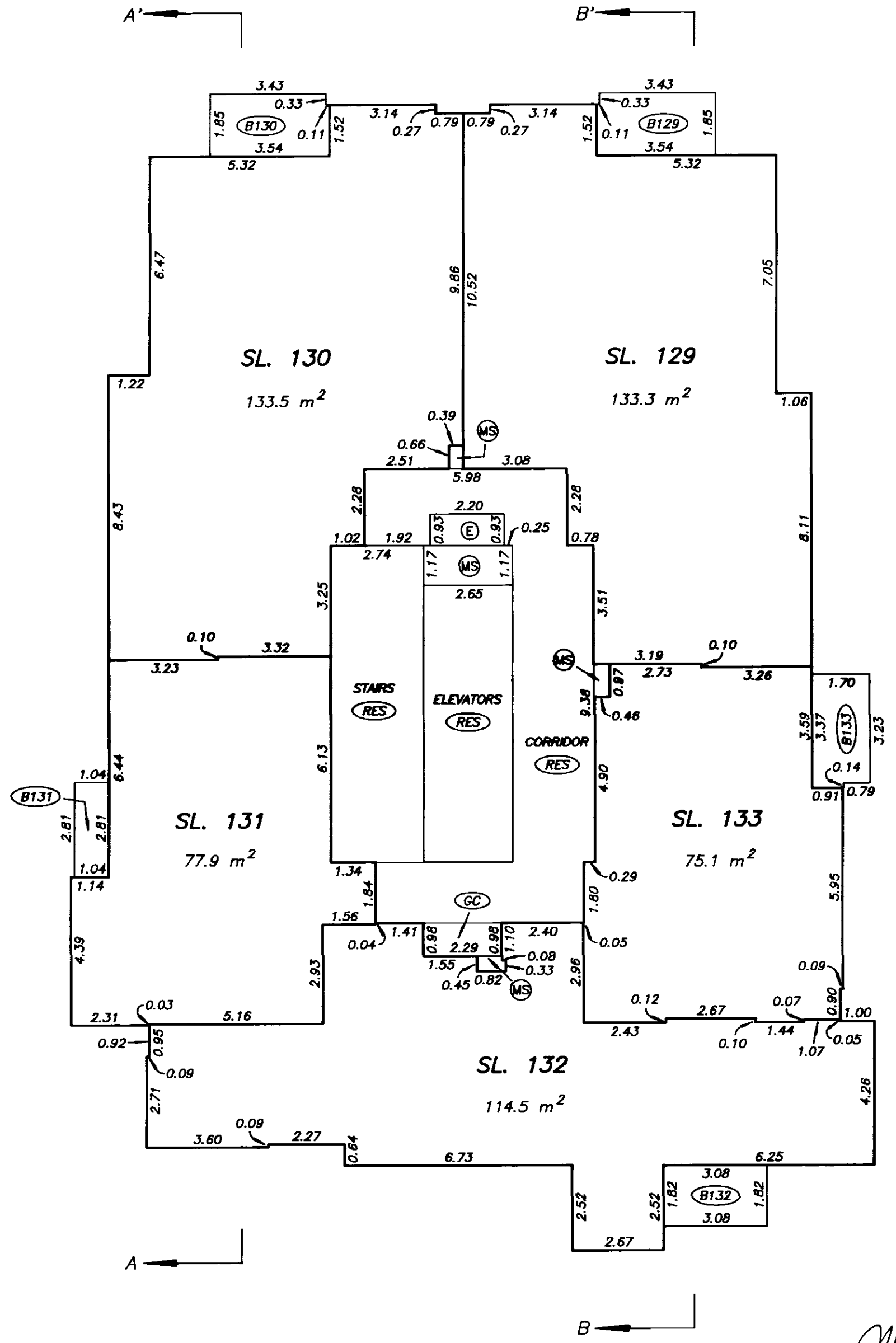

DATE : SEPTEMBER 26, 2003

DRAWING # 30376-10
FILE # 30376-10_B1L22

FILED VABCS535 M37352 2004-01-02-13.18.56.751200

TWENTY THIRD LEVEL FLOOR PLAN

BUILDING 1

STRATA PLAN BCS 535

SCALE 1:125

2 0 2 4

ALL DISTANCES ARE IN METRES.

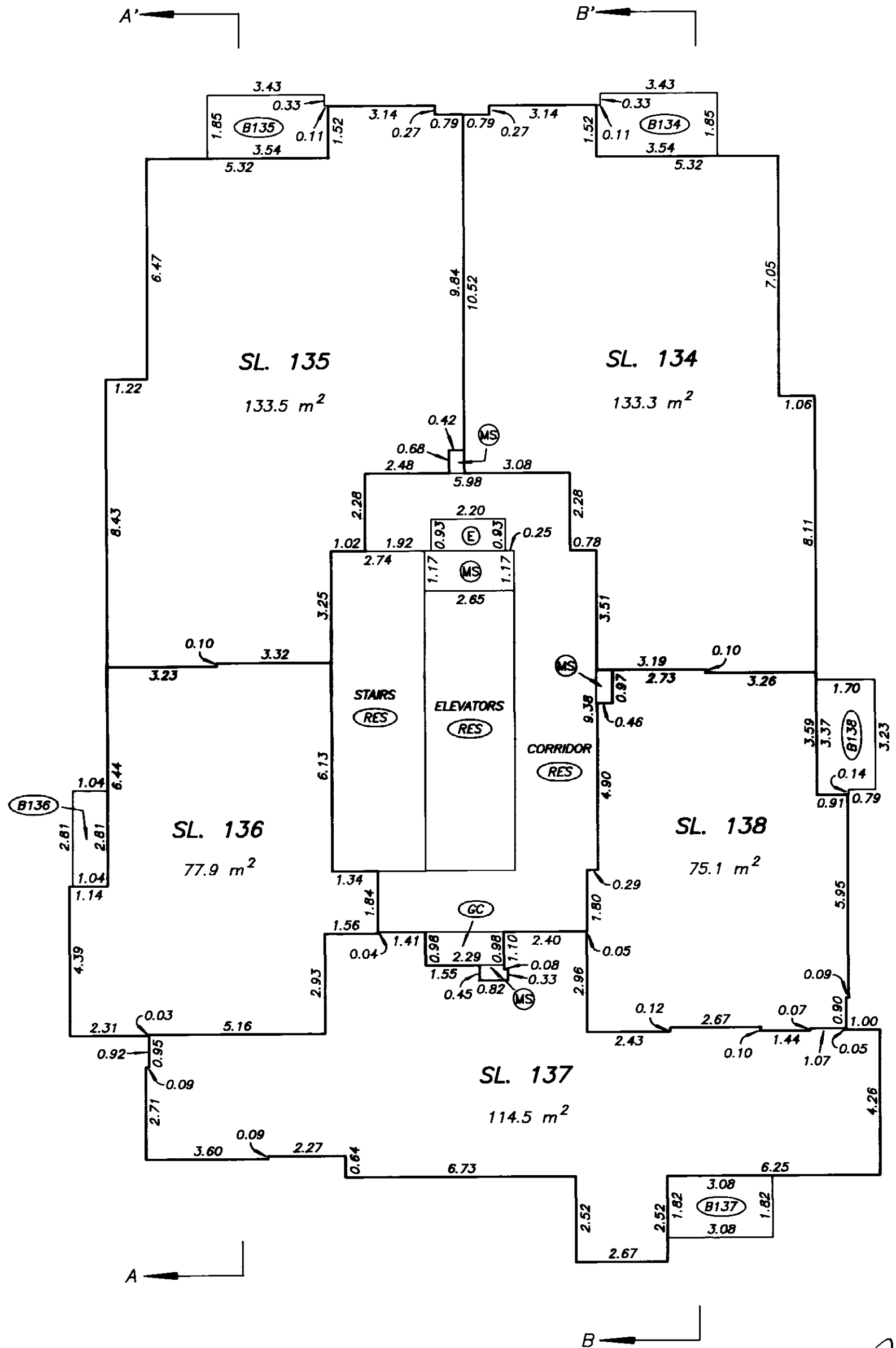

DATE : SEPTEMBER 26, 2003

DRAWING # 30376-10
FILE # 30376-10_B1L23

FILED VABC535 M37352 2004-01-02-13.18.56.751200

TWENTY FOURTH LEVEL FLOOR PLAN

BUILDING 1

STRATA PLAN BCS 535

SCALE 1:125

2 0 2 4

ALL DISTANCES ARE IN METRES.

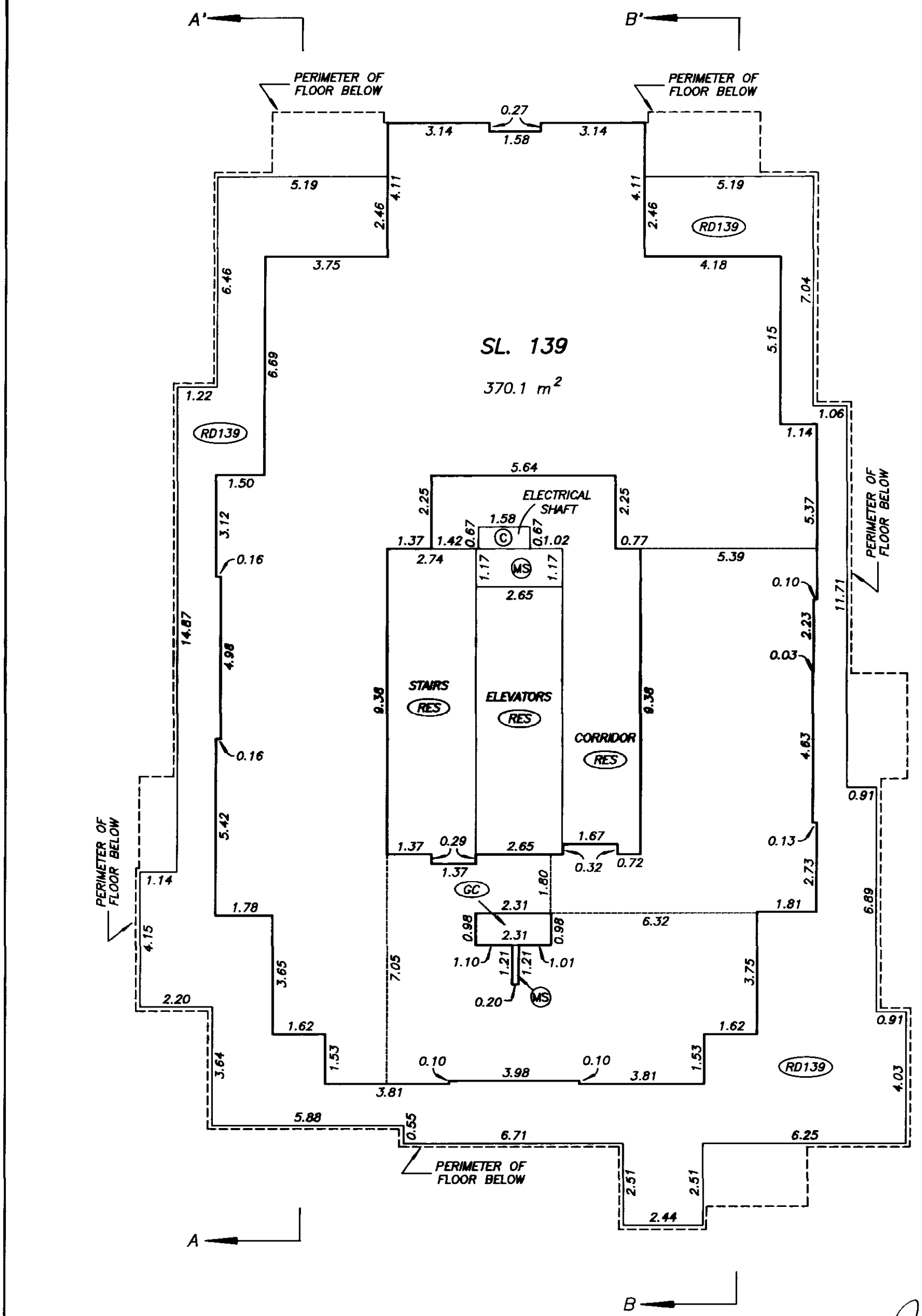

DATE : SEPTEMBER 26, 2003

DRAWING # 30376-10
FILE # 30376-10_B1L24

FILED VABCS535 M37352 2004-01-02-13.18.56.751200

TWENTY FIFTH LEVEL FLOOR PLAN

BUILDING 1

STRATA PLAN BCS 535

SCALE 1:125

2 0 2 4

ALL DISTANCES ARE IN METRES.

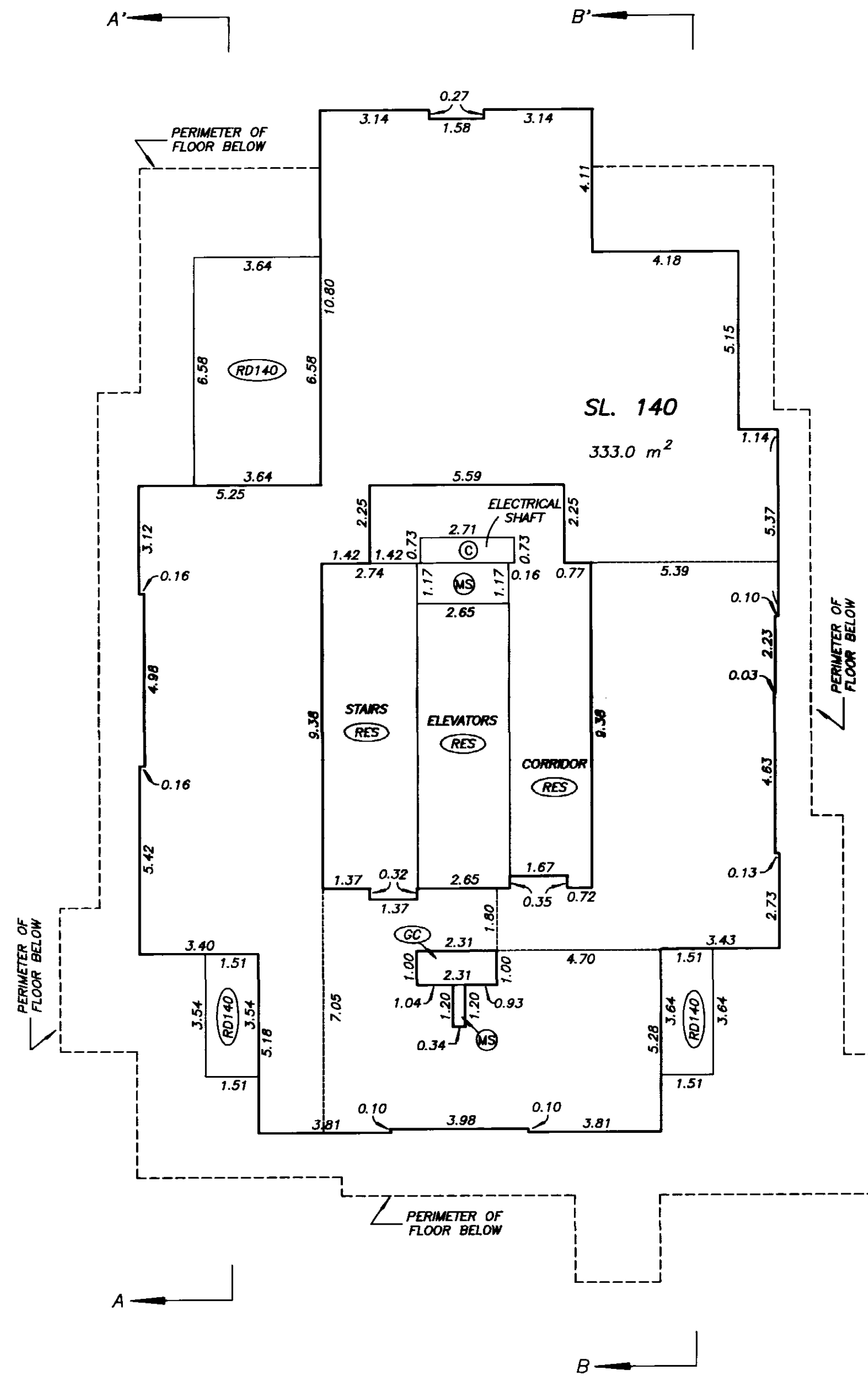

DATE : SEPTEMBER 26, 2003

DRAWING # 30376-10
FILE # 30376-10_B1L25

FILED VABCS535 M37352 2004-01-02-13.18.56.751200

MECHANICAL ROOM LEVEL FLOOR PLAN

BUILDING 1

STRATA PLAN BCS 535

SCALE 1:125

2 0 2 4

ALL DISTANCES ARE IN METRES.

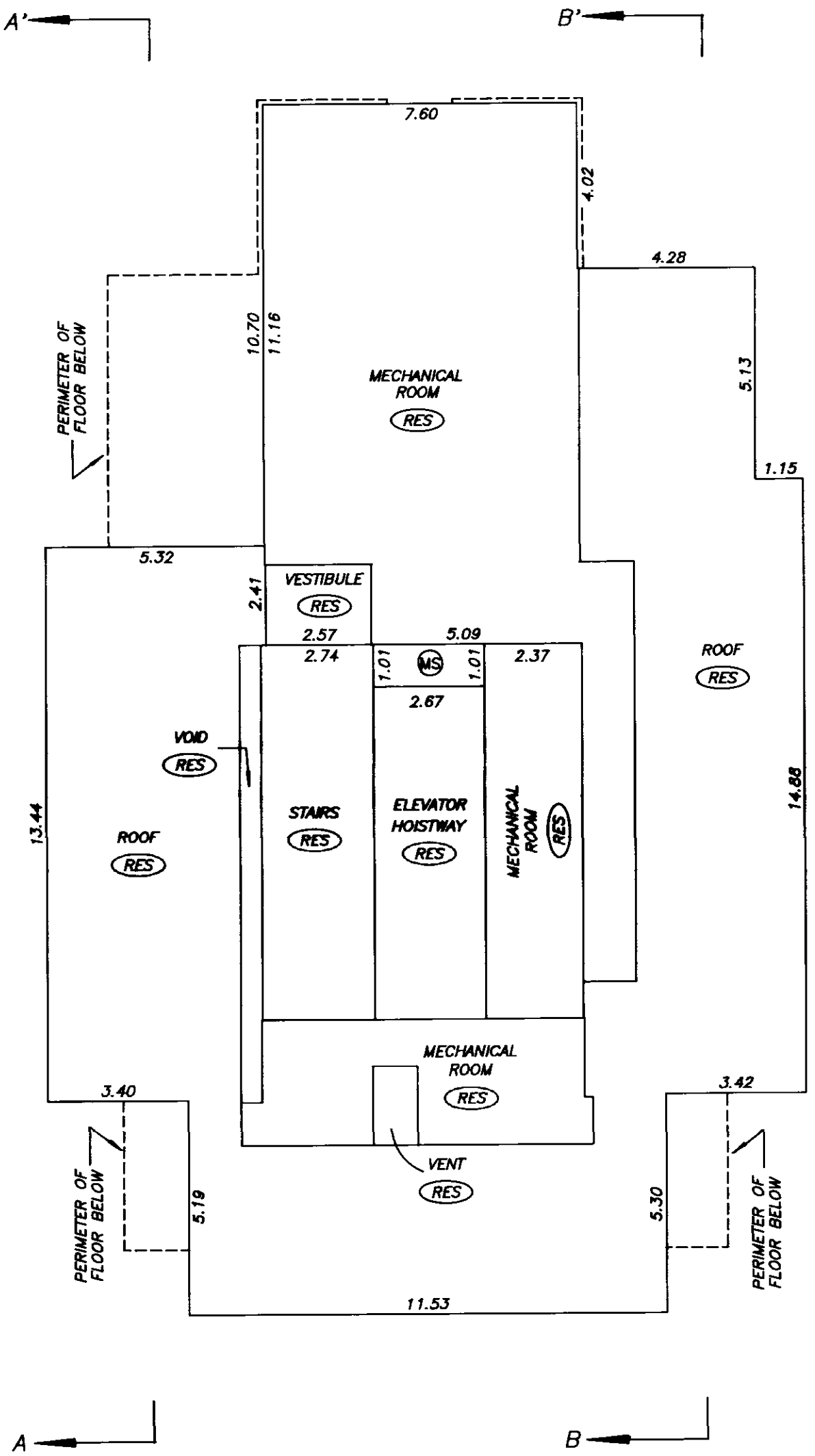

DATE : SEPTEMBER 26, 2003

DRAWING # 30376-10
FILE # 30376-10_B1LMR

FILED VABCS535 M37352 2004-01-02-13.18.56.751200

ELEVATOR MACHINE ROOM LEVEL FLOOR PLAN

BUILDING 1

STRATA PLAN BCS 535

SCALE 1:125

2 0 2 4

ALL DISTANCES ARE IN METRES.

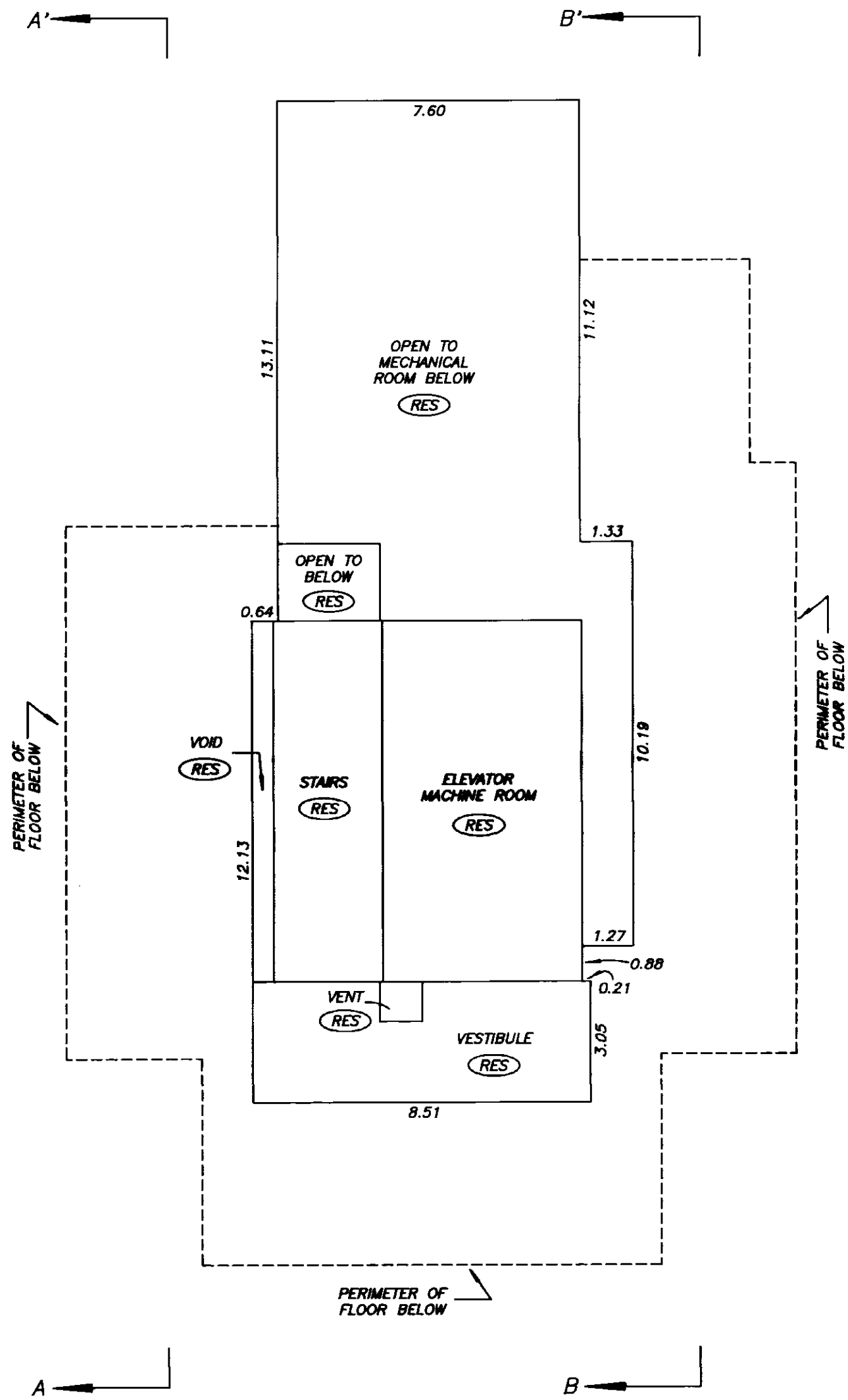

DATE : SEPTEMBER 26, 2003

DRAWING # 30376-10
FILE # 30376-10_B1EMR

FILED VABCS535 M37352 2004-01-02-13.18.56.751200

ROOF LEVEL PLAN

BUILDING 1

STRATA PLAN BCS 535

SCALE 1:125

2 0 2 4

ALL DISTANCES ARE IN METRES.

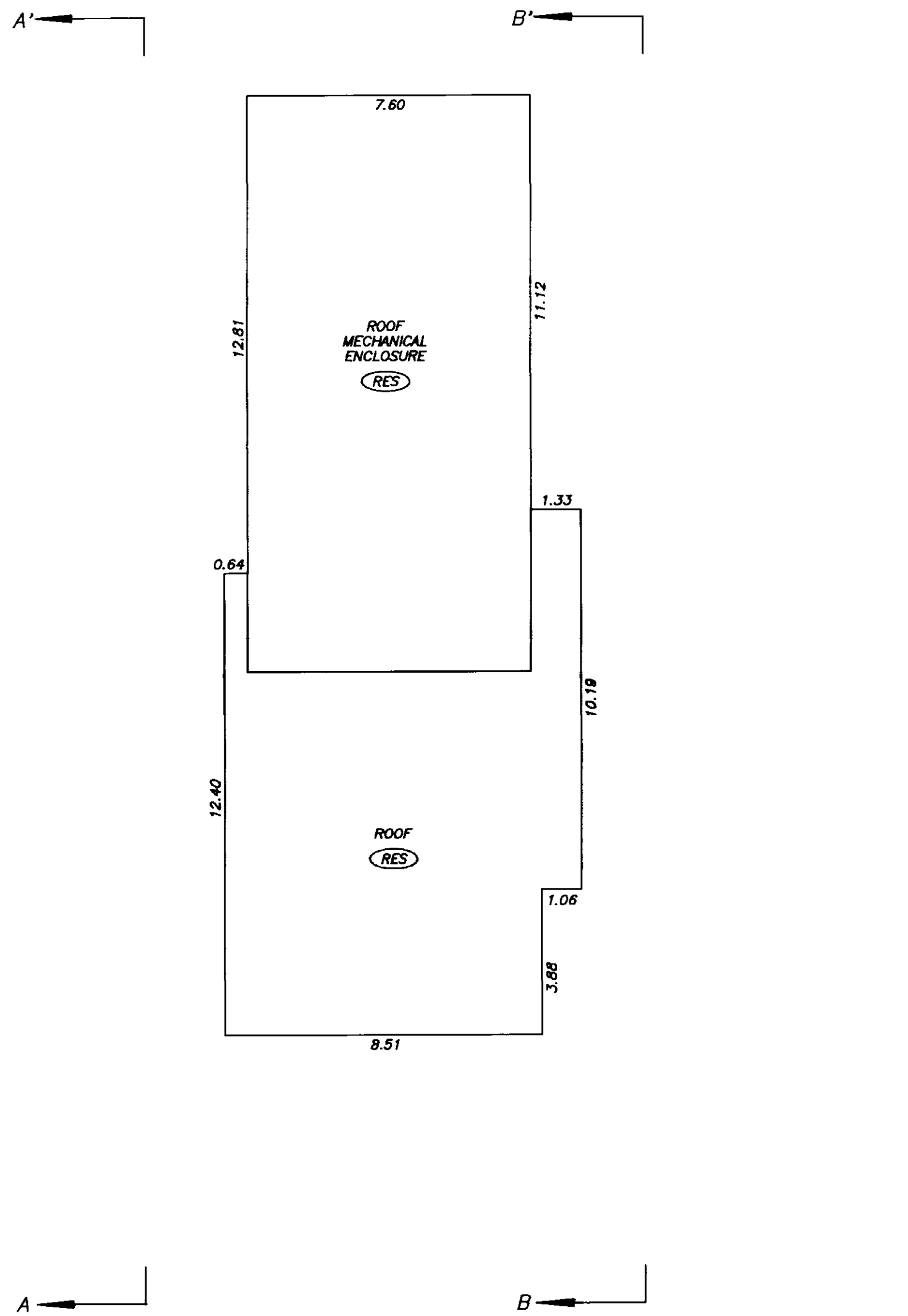

DATE : SEPTEMBER 26, 2003

DRAWING # 30376-10
FILE # 30376-10_B1RL

FILED VABCS535 M37352 2004-01-02-13.18.56.751200

GROUND LEVEL FLOOR PLAN DETAIL "H"

BUILDING 2

STRATA PLAN BCS 535

SCALE 1:125

2 0 2 4

ALL DISTANCES ARE IN METRES.

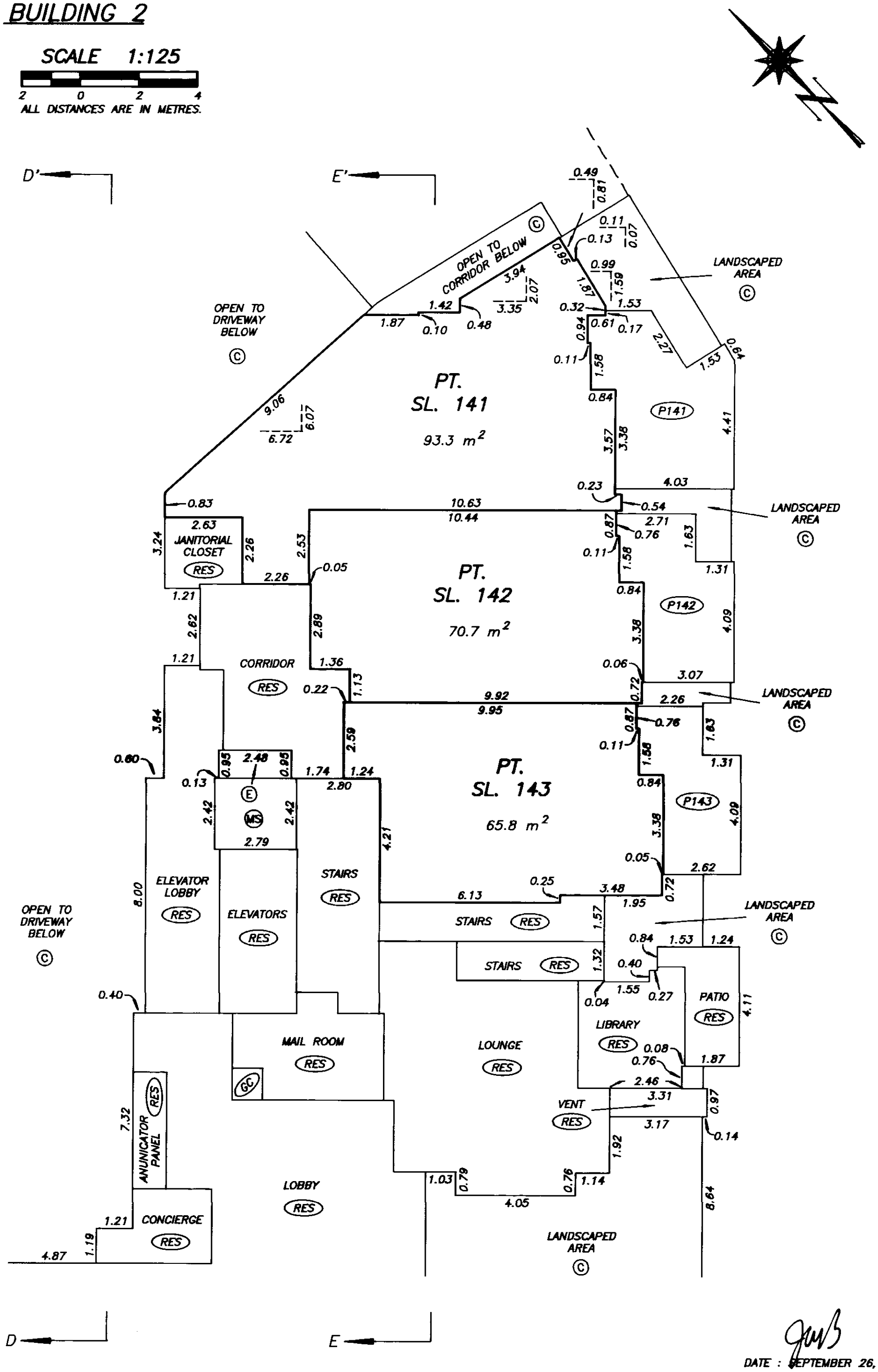

DATE : SEPTEMBER 26, 2003

DRAWING # 30376-10
FILE # 30376-10_L1

FILED VABC535 M37352 2004-01-02-13.18.56.751200

SECOND LEVEL FLOOR PLAN DETAIL "M" BUILDING 2

STRATA PLAN BCS 535

SCALE 1:125

2 0 2 4

ALL DISTANCES ARE IN METRES.

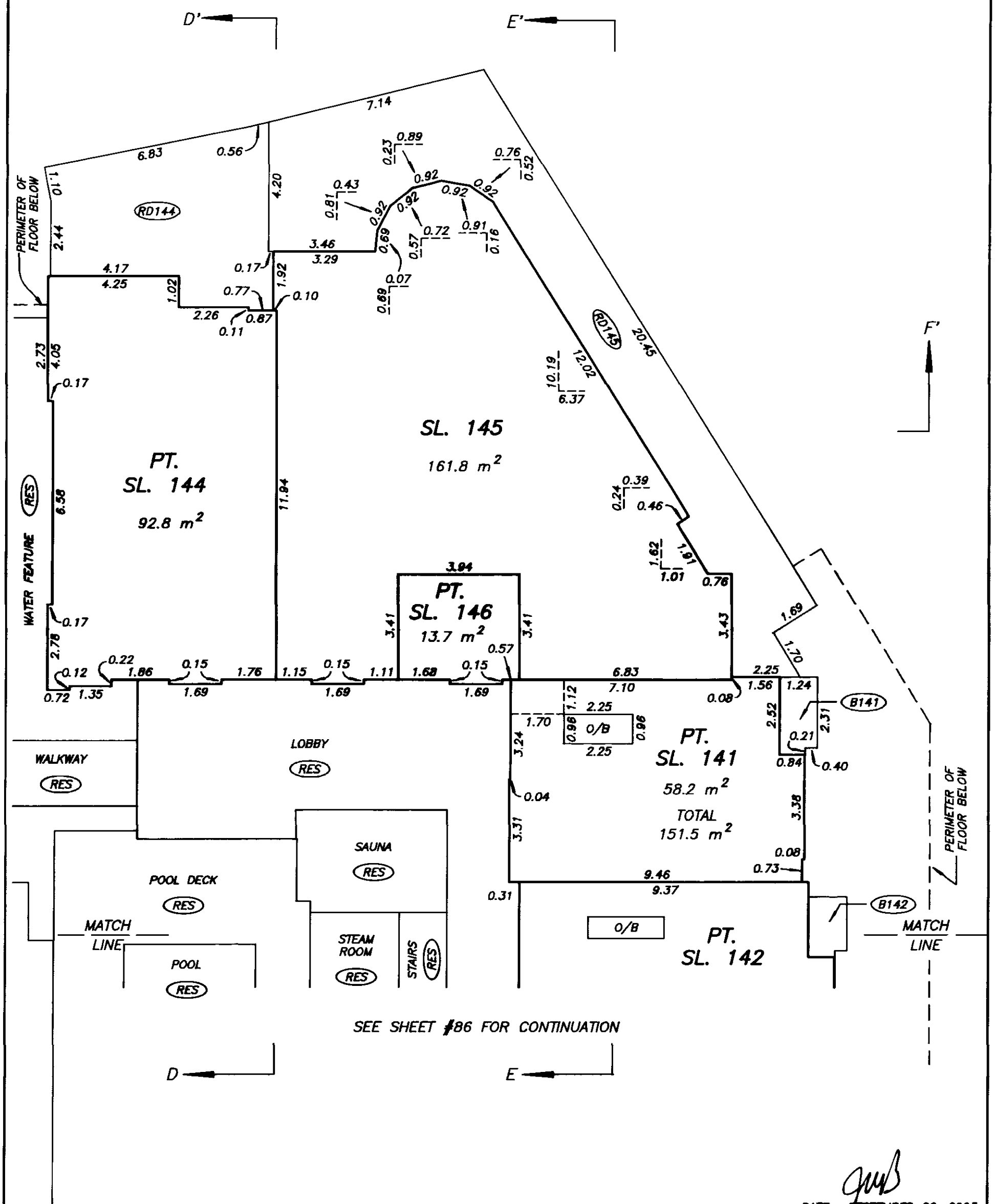

DATE : SEPTEMBER 26, 2003

DRAWING # 30376-10
FILE # 30376-10_L2

FILED VABC5535 M37352 2004-01-02-13.18.56.751200

SECOND LEVEL FLOOR PLAN DETAIL "N"

BUILDING 2

STRATA PLAN BCS 535

SCALE 1:125

2 0 2 4

ALL DISTANCES ARE IN METRES.

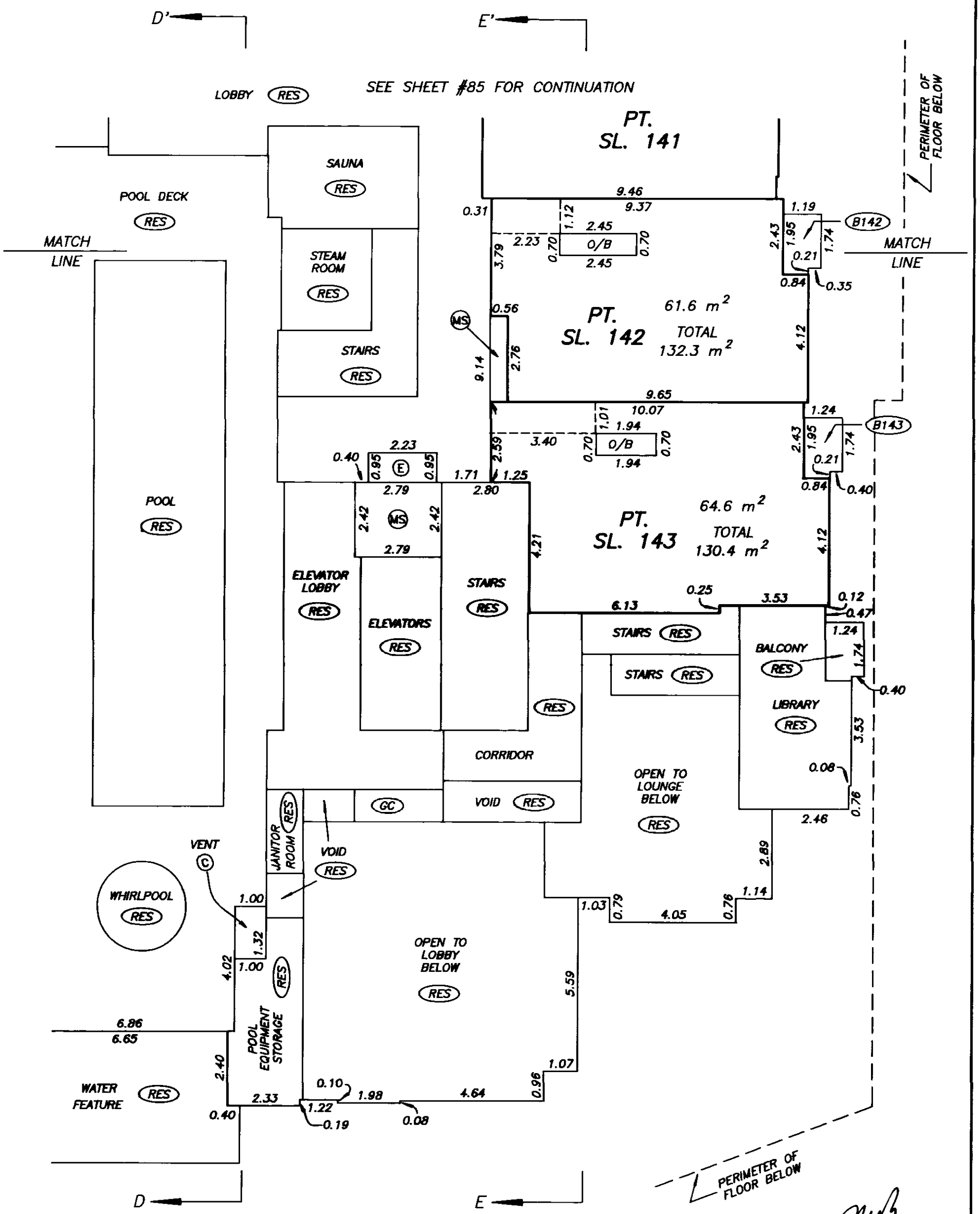

DATE : SEPTEMBER 26, 2003

DRAWING # 30376-10
FILE # 30376-10_L2

FILED VABCS535 M37352 2004-01-02-13.18.56.751200

THIRD LEVEL FLOOR PLAN DETAIL "R" BUILDING 2

STRATA PLAN BCS 535

SCALE 1:125

2 0 2 4

ALL DISTANCES ARE IN METRES.

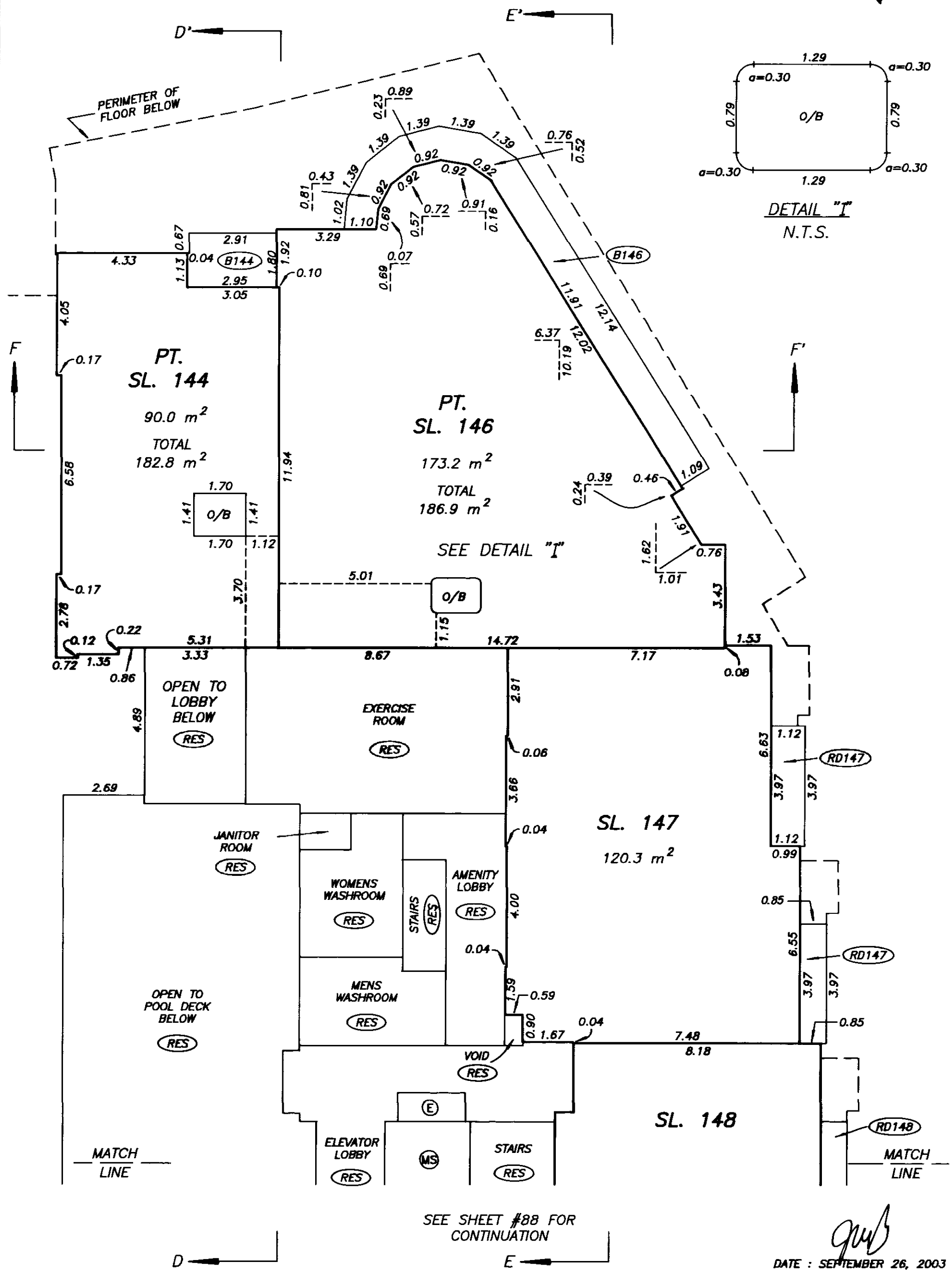

DATE : SEPTEMBER 26, 2003

DRAWING # 30376-10
FILE # 30376-10_L3

FILED VABCS535 M37352 2004-01-02-13.18.56.751200

THIRD LEVEL FLOOR PLAN DETAIL "S"

BUILDING 2

STRATA PLAN BCS 535

SCALE 1:125

2 0 2 4

ALL DISTANCES ARE IN METRES.

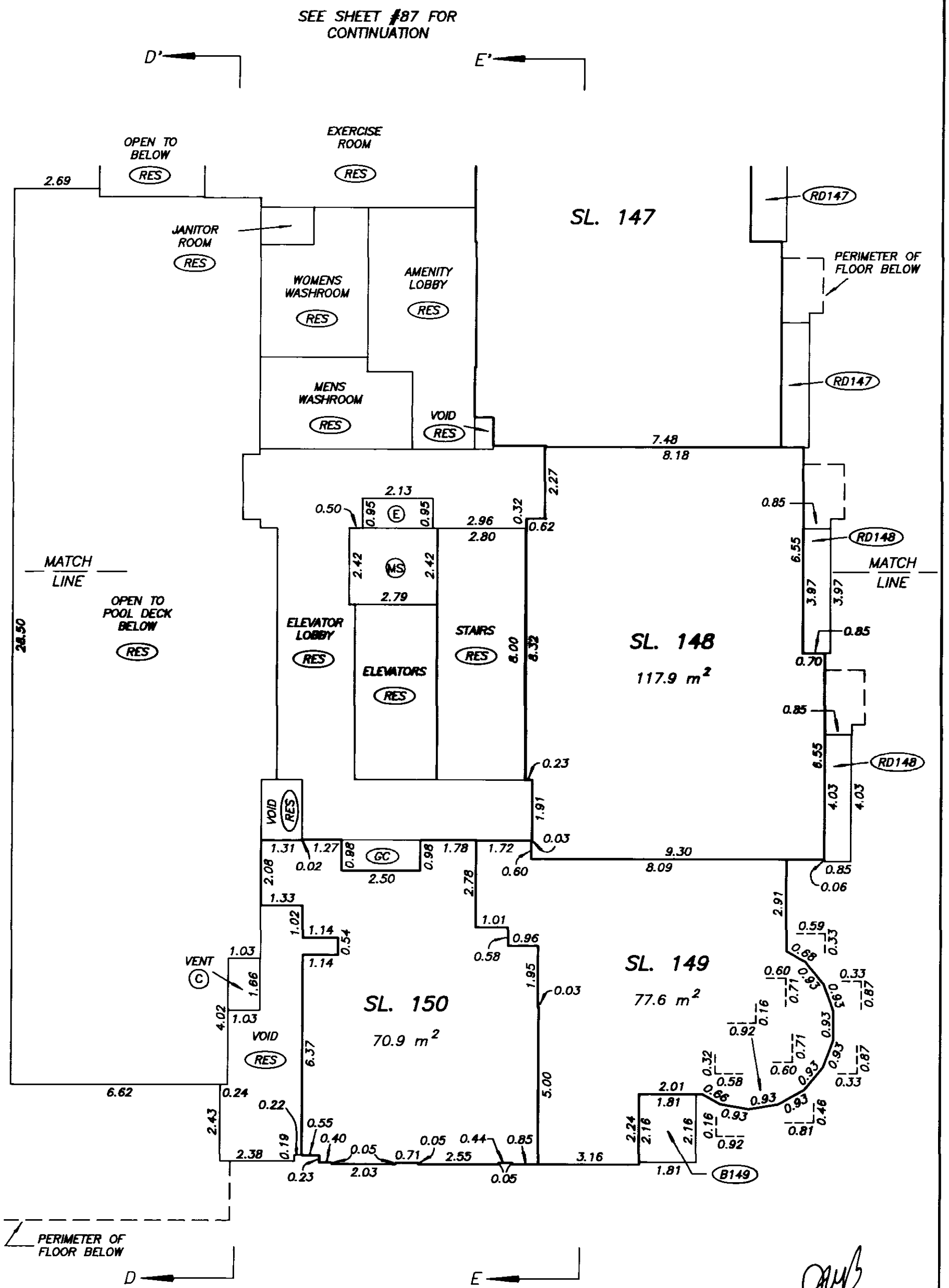

DATE : SEPTEMBER 26, 2003

DRAWING # 30376-10
FILE # 30376-10_L3

FILED VABC535 M37352 2004-01-02-13.18.56.751200

FOURTH LEVEL FLOOR PLAN DETAIL "W"

BUILDING 2

STRATA PLAN BCS 535

SCALE 1:125

2 0 2 4

ALL DISTANCES ARE IN METRES.

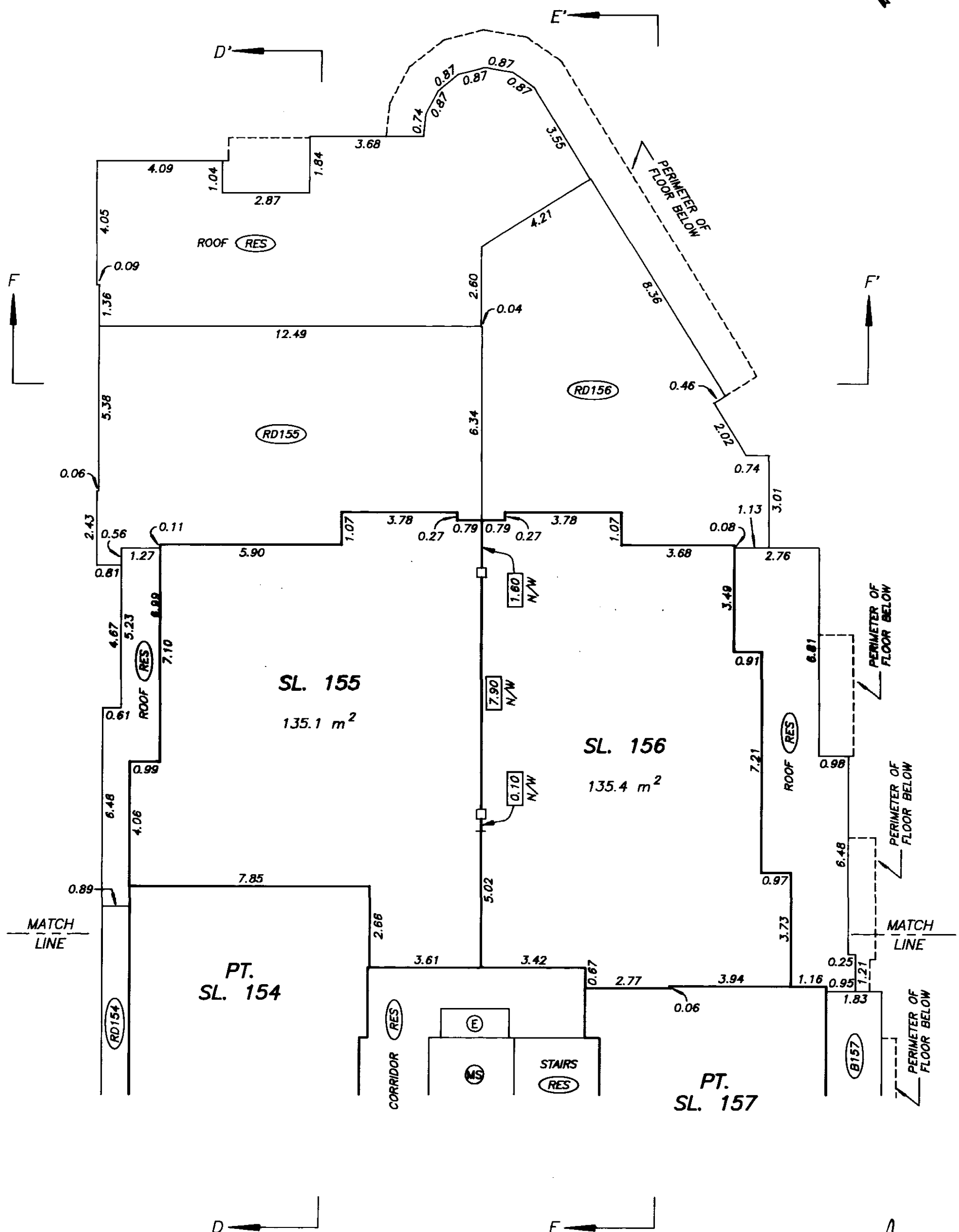

SEE SHEET #90 FOR CONTINUATION

DATE : SEPTEMBER 26, 2003

DRAWING # 30376-10
FILE # 30376-10_L4

FILED VABCS535 M37352 2004-01-02-13.18.56.751200

FOURTH LEVEL FLOOR PLAN DETAIL "X"

BUILDING 2

STRATA PLAN BCS 535

SCALE 1:125

2 0 2 4

ALL DISTANCES ARE IN METRES.

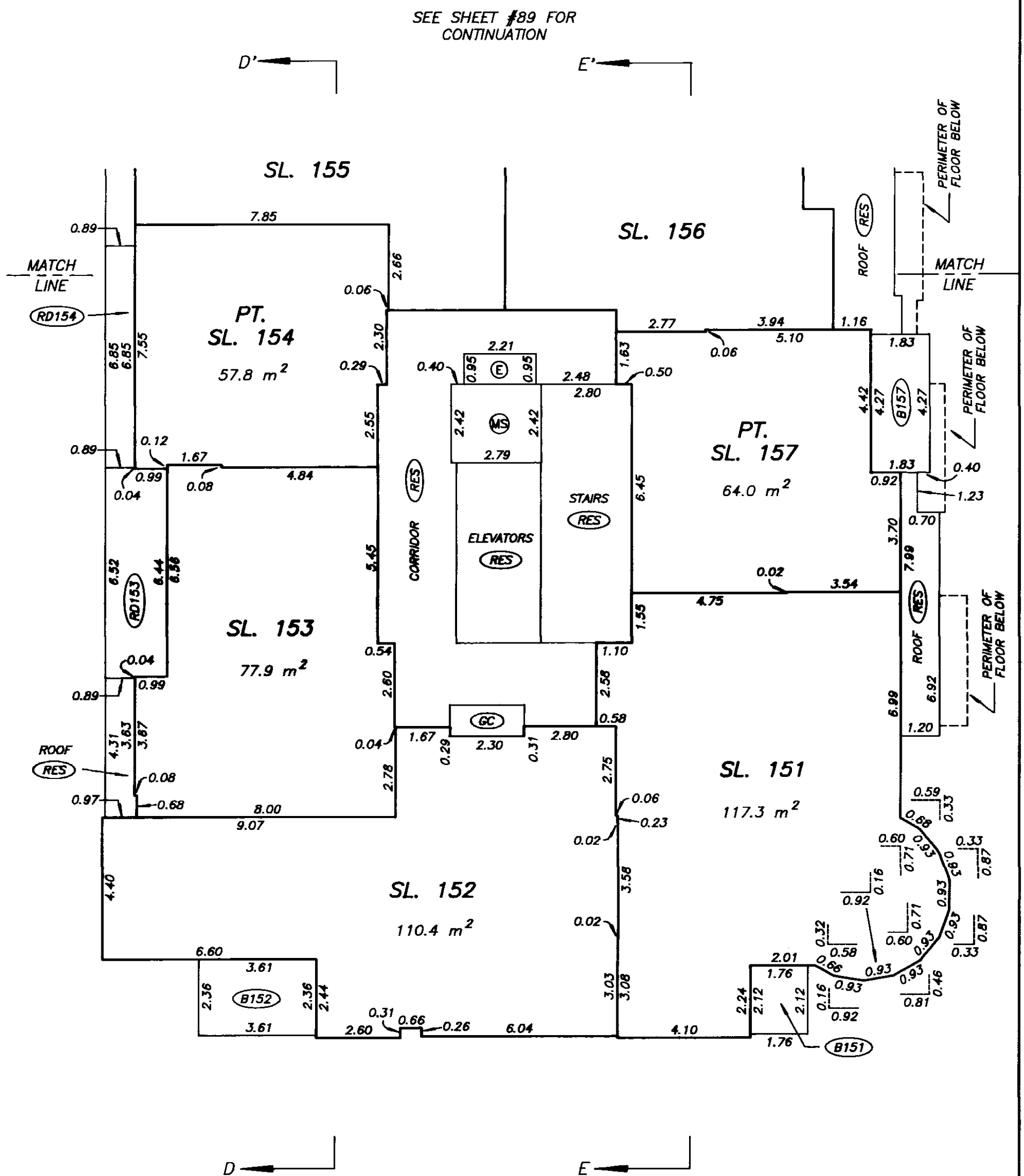

DATE : SEPTEMBER 26, 2003

DRAWING # 30376-10
FILE # 30376-10_L4

FILED VABCS535 M37352 2004-01-02-13.18.56.751200

FIFTH LEVEL FLOOR PLAN

BUILDING 2

STRATA PLAN BCS 535

SCALE 1:125

2 0 2 4

ALL DISTANCES ARE IN METRES.

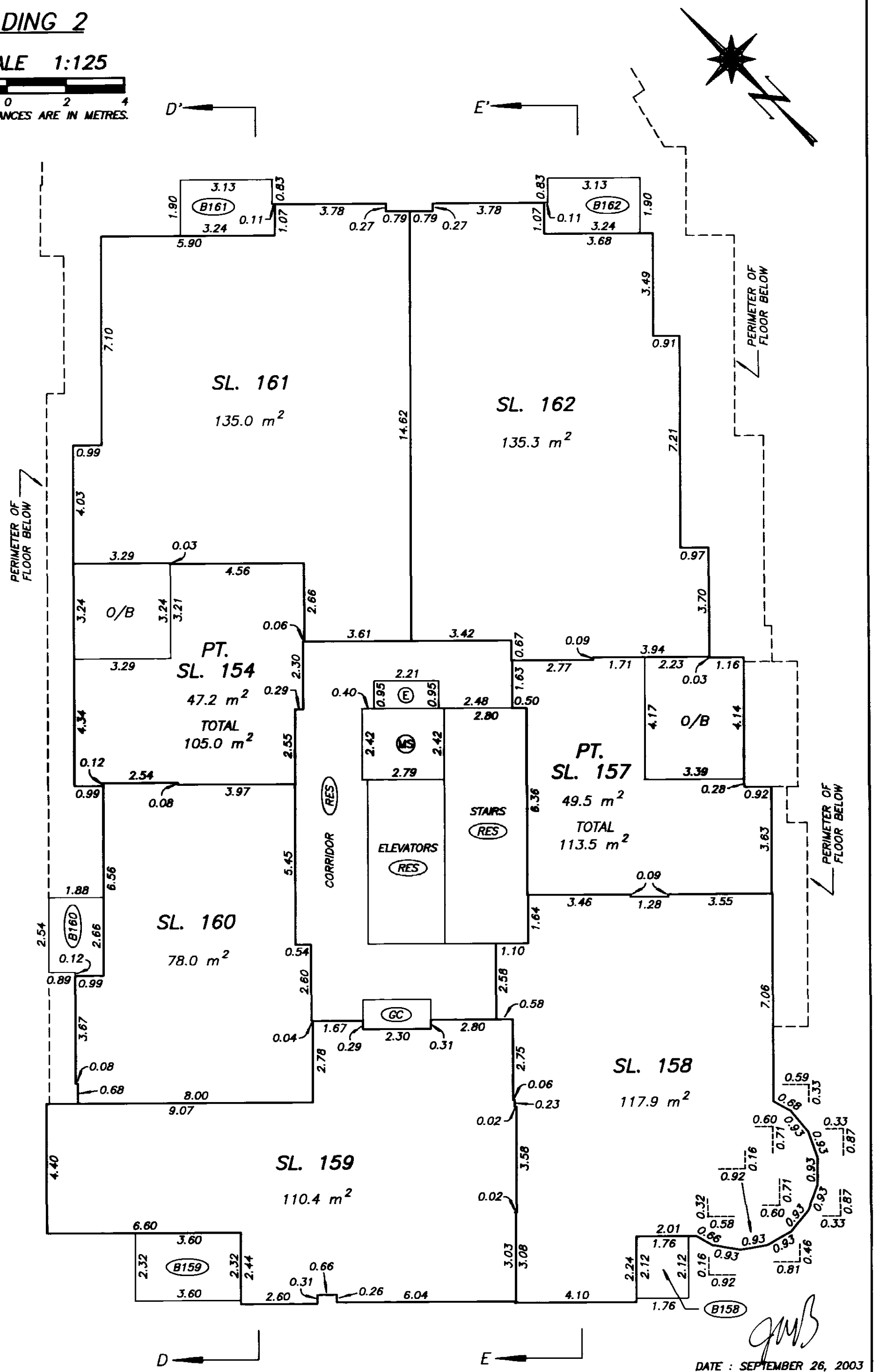

DATE : SEPTEMBER 26, 2003

DRAWING # 30376-10
FILE # 30376-10_B2L5

FILED VABCS535 M37352 2004-01-02-13.18.56.751200

SIXTH LEVEL FLOOR PLAN

BUILDING 2

STRATA PLAN BCS 535

SCALE 1:125

2 0 2 4

ALL DISTANCES ARE IN METRES.

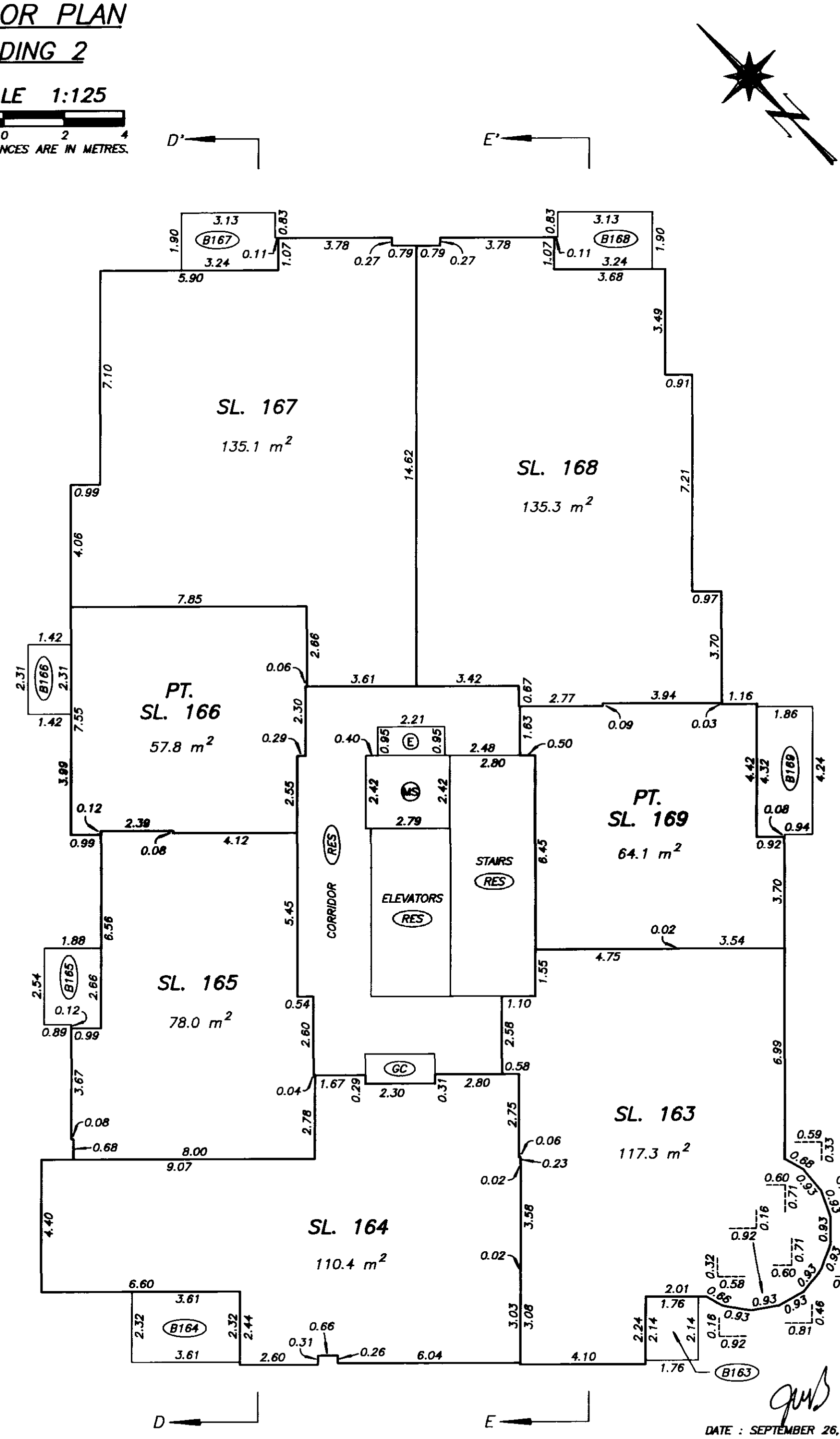

DATE : SEPTEMBER 26, 2003

DRAWING # 30376-10
FILE # 30376-10_B2L6

FILED VABC535 M37352 2004-01-02-13.18.56.751200

SEVENTH LEVEL FLOOR PLAN

BUILDING 2

STRATA PLAN BCS 535

SCALE 1:125

2 0 2 4

ALL DISTANCES ARE IN METRES.

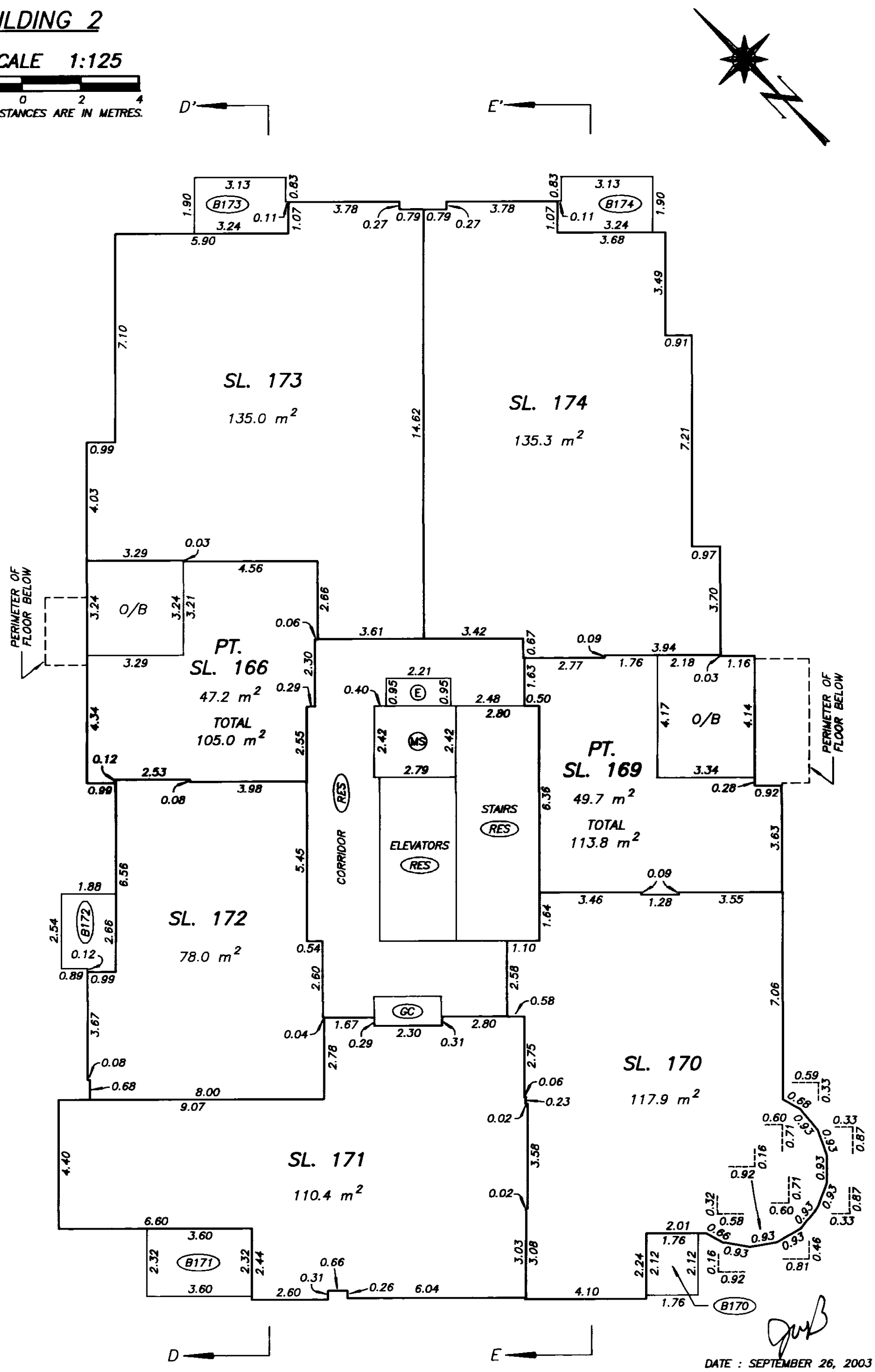

DATE : SEPTEMBER 26, 2003

DRAWING # 30376-10
FILE # 30376-10_B2L7

FILED VABC535 M37352 2004-01-02-13.18.56.751200

EIGHTH LEVEL FLOOR PLAN

BUILDING 2

STRATA PLAN BCS 535

SCALE 1:125

2 0 2 4

ALL DISTANCES ARE IN METRES.

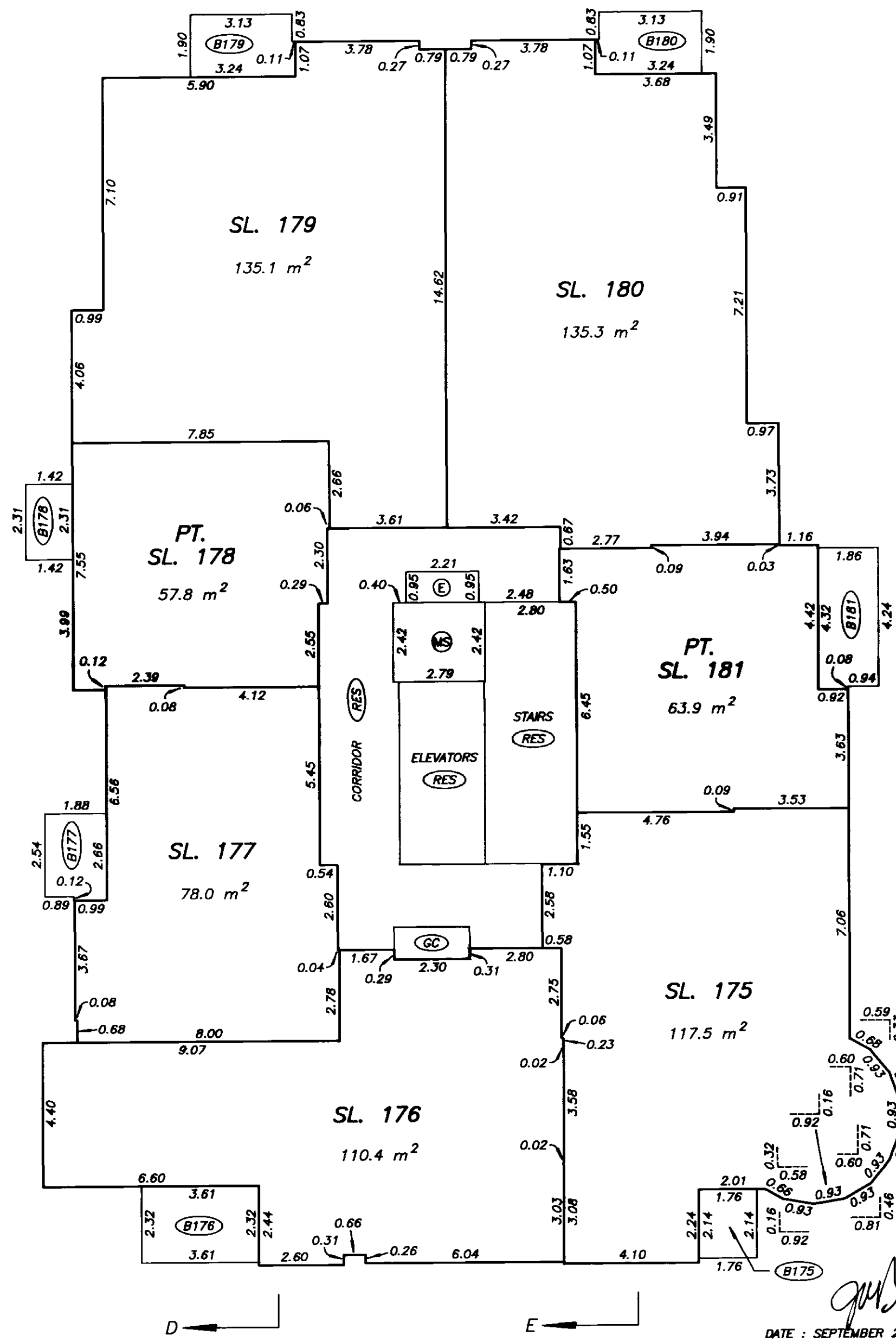

DATE : SEPTEMBER 26, 2003

DRAWING # 30376-10
FILE # 30376-10_B2L8

FILED VABC535 M37352 2004-01-02-13.18.56.751200

NINTH LEVEL FLOOR PLAN

BUILDING 2

STRATA PLAN BCS 535

SCALE 1:125

2 0 2 4

ALL DISTANCES ARE IN METRES.

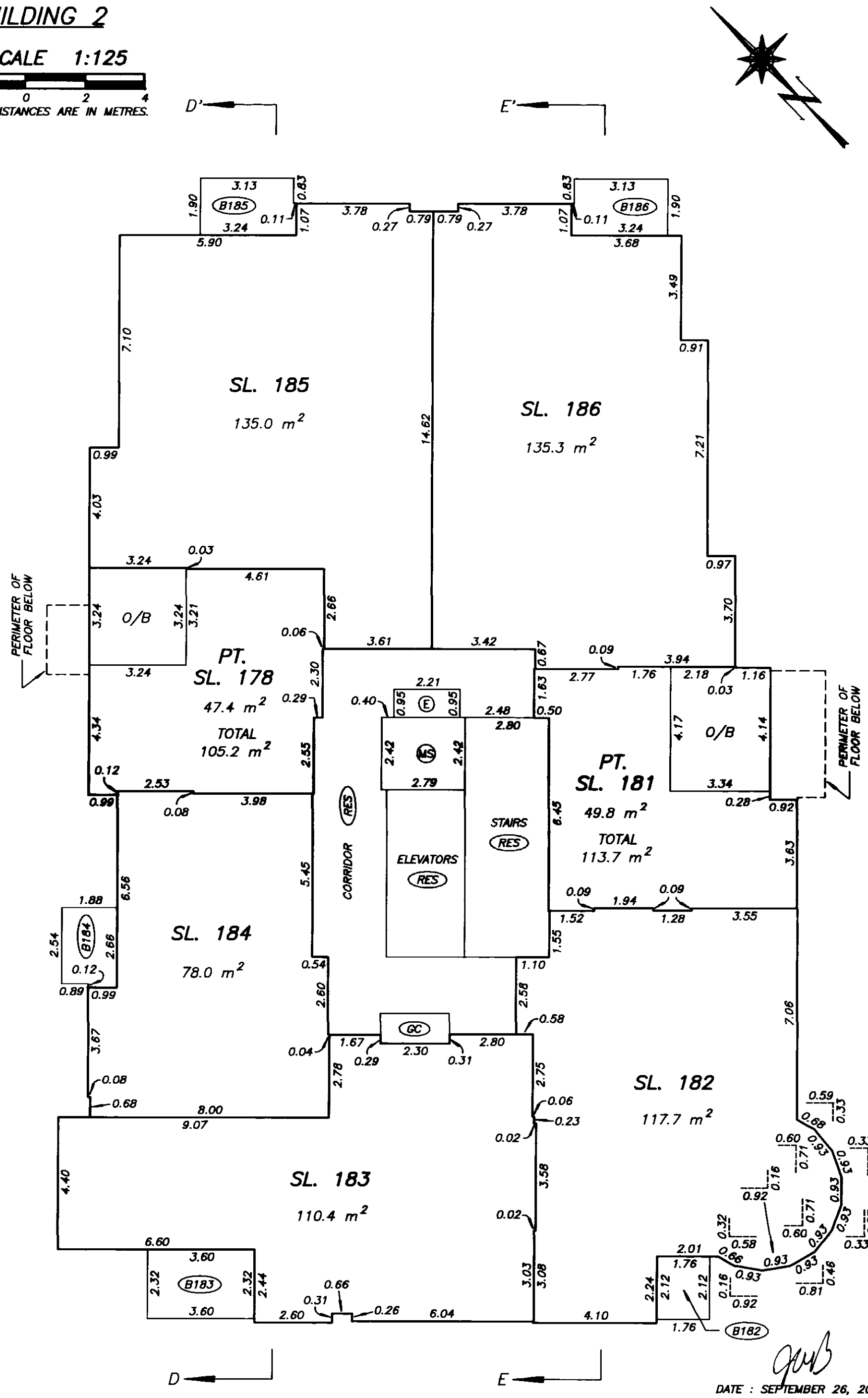

DATE : SEPTEMBER 26, 2003

DRAWING # 30376-10
FILE # 30376-10_B2L9

FILED VABC535 M37352 2004-01-02-13.18.56.751200

TENTH LEVEL FLOOR PLAN

BUILDING 2

STRATA PLAN BCS 535

SCALE 1:125

2 0 2 4

ALL DISTANCES ARE IN METRES.

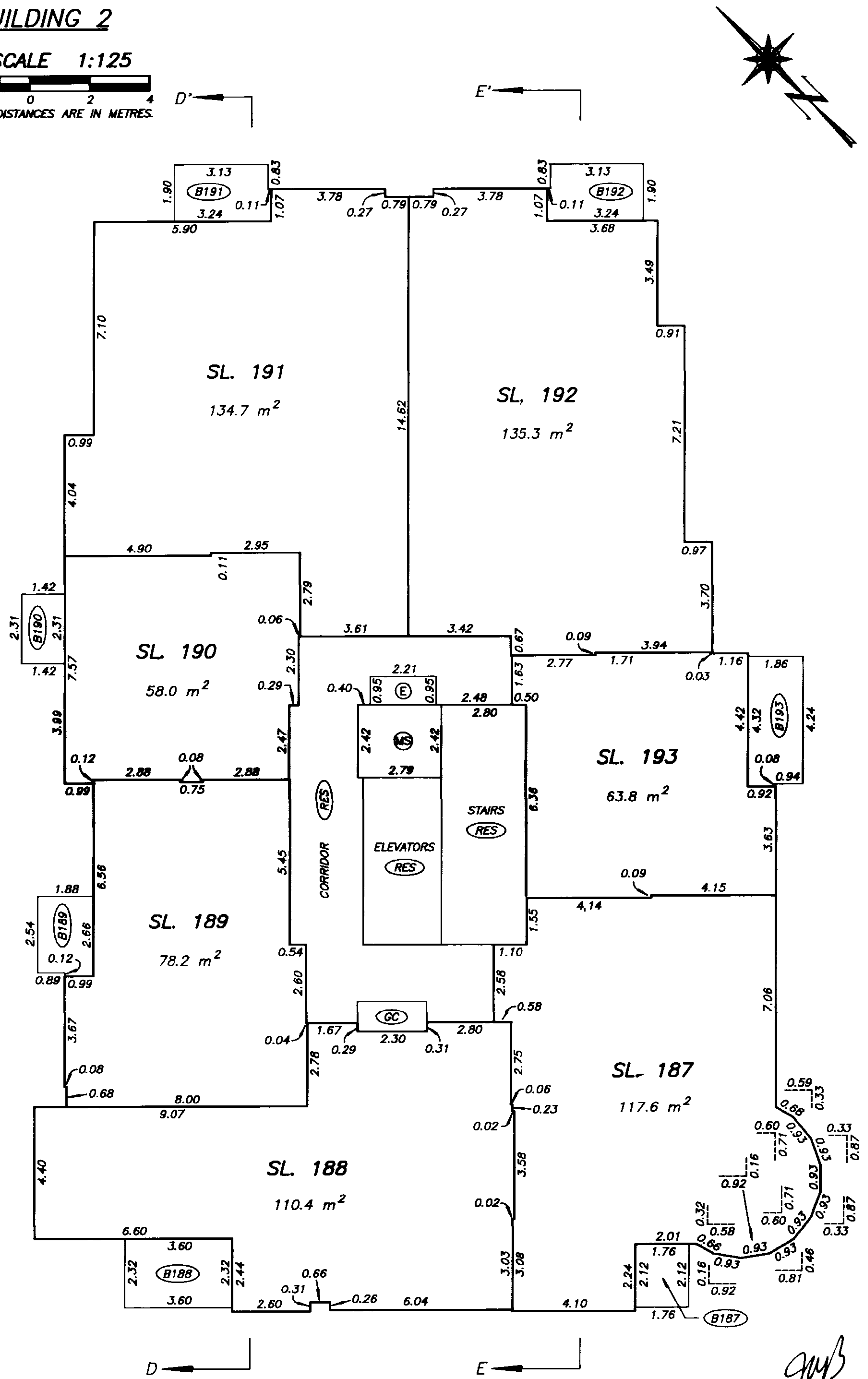

DATE : SEPTEMBER 26, 2003

DRAWING # 30376-10
FILE # 30376-10_B2L10

FILED VABCS535 M37352 2004-01-02-13.18.56.751200

ELEVENTH LEVEL FLOOR PLAN
BUILDING 2

STRATA PLAN BCS 535

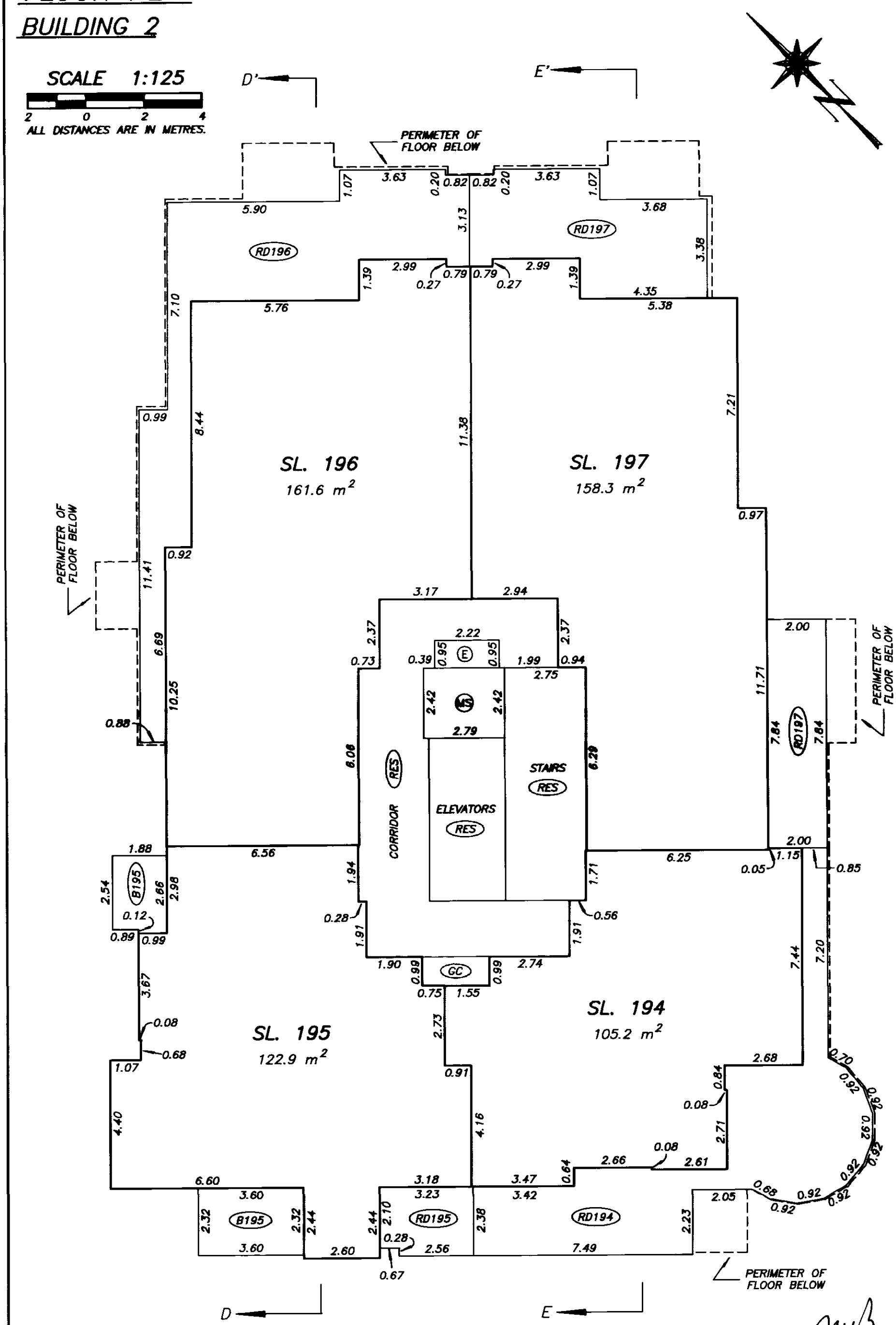

DATE : SEPTEMBER 26, 2003

DRAWING # 30376-10
FILE # 30376-10_B2L11

FILED VABCS535 M37352 2004-01-02-13.18.56.751200

TWELFTH LEVEL FLOOR PLAN

BUILDING 2

STRATA PLAN BCS 535

SCALE 1:125

2 0 2 4

ALL DISTANCES ARE IN METRES.

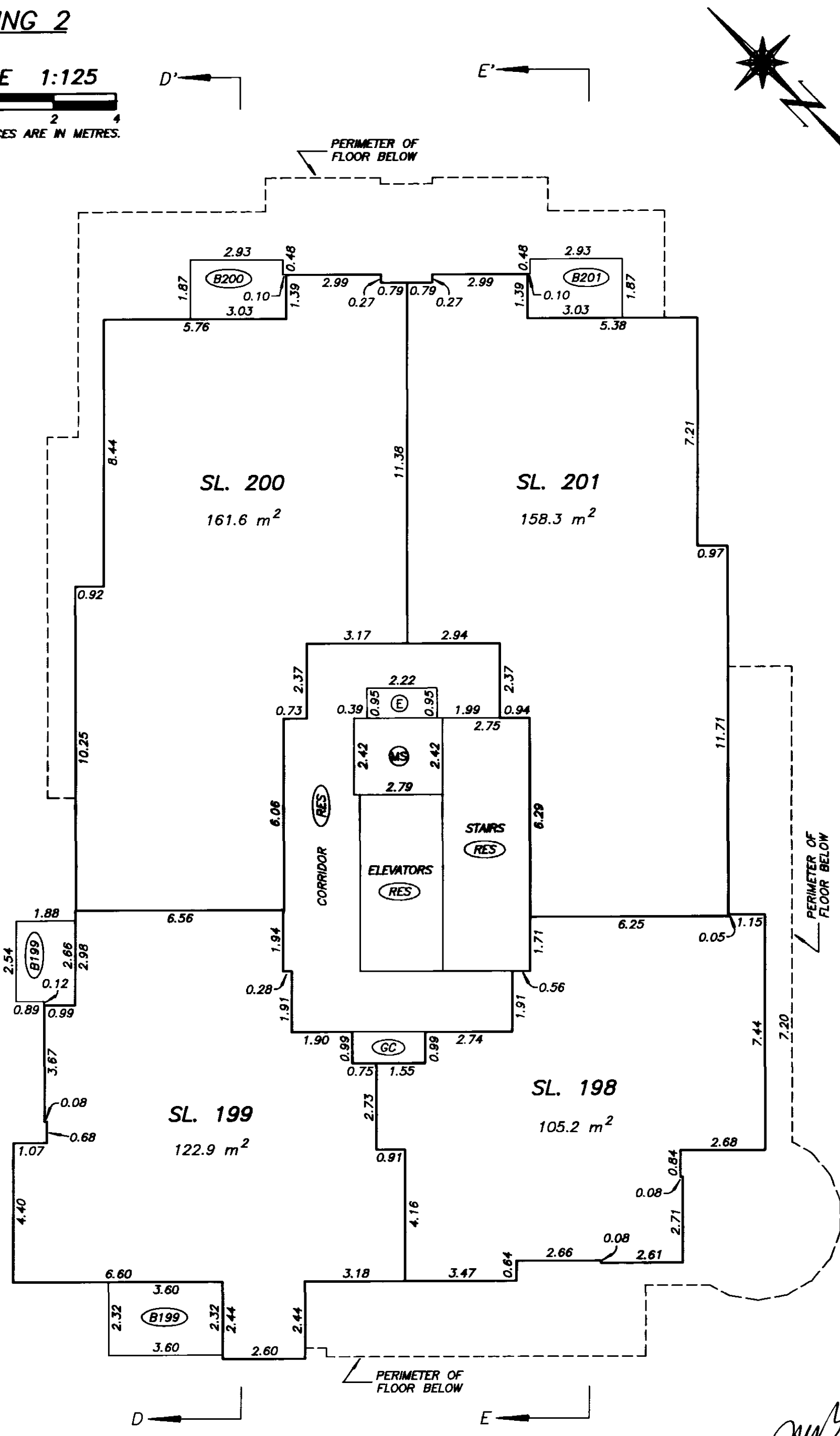

DATE : SEPTEMBER 26, 2003

DRAWING # 30376-10
FILE # 30376-10_B2L12

FILED VABCS535 M37352 2004-01-02-13.18.56.751200

THIRTEENTH LEVEL FLOOR PLAN

BUILDING 2

STRATA PLAN BCS 535

SCALE 1:125

2 0 2 4

ALL DISTANCES ARE IN METRES.

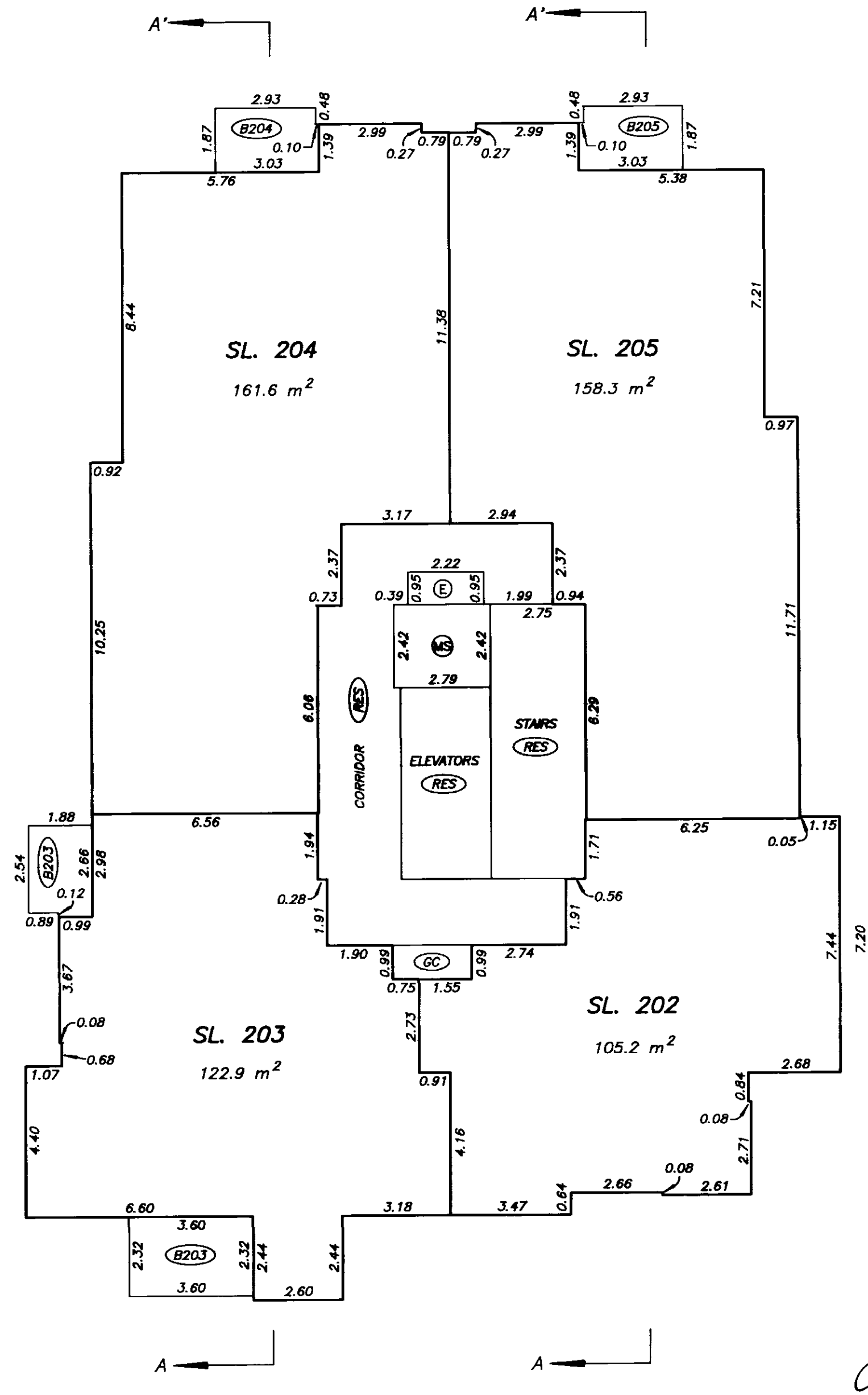

DATE : SEPTEMBER 26, 2003

DRAWING # 30376-10
FILE # 30376-10_B2L13

FILED VABC535 M37352 2004-01-02-13.18.56.751200

FOURTEENTH LEVEL FLOOR PLAN

BUILDING 2

STRATA PLAN BCS 535

SCALE 1:125

2 0 2 4

ALL DISTANCES ARE IN METRES.

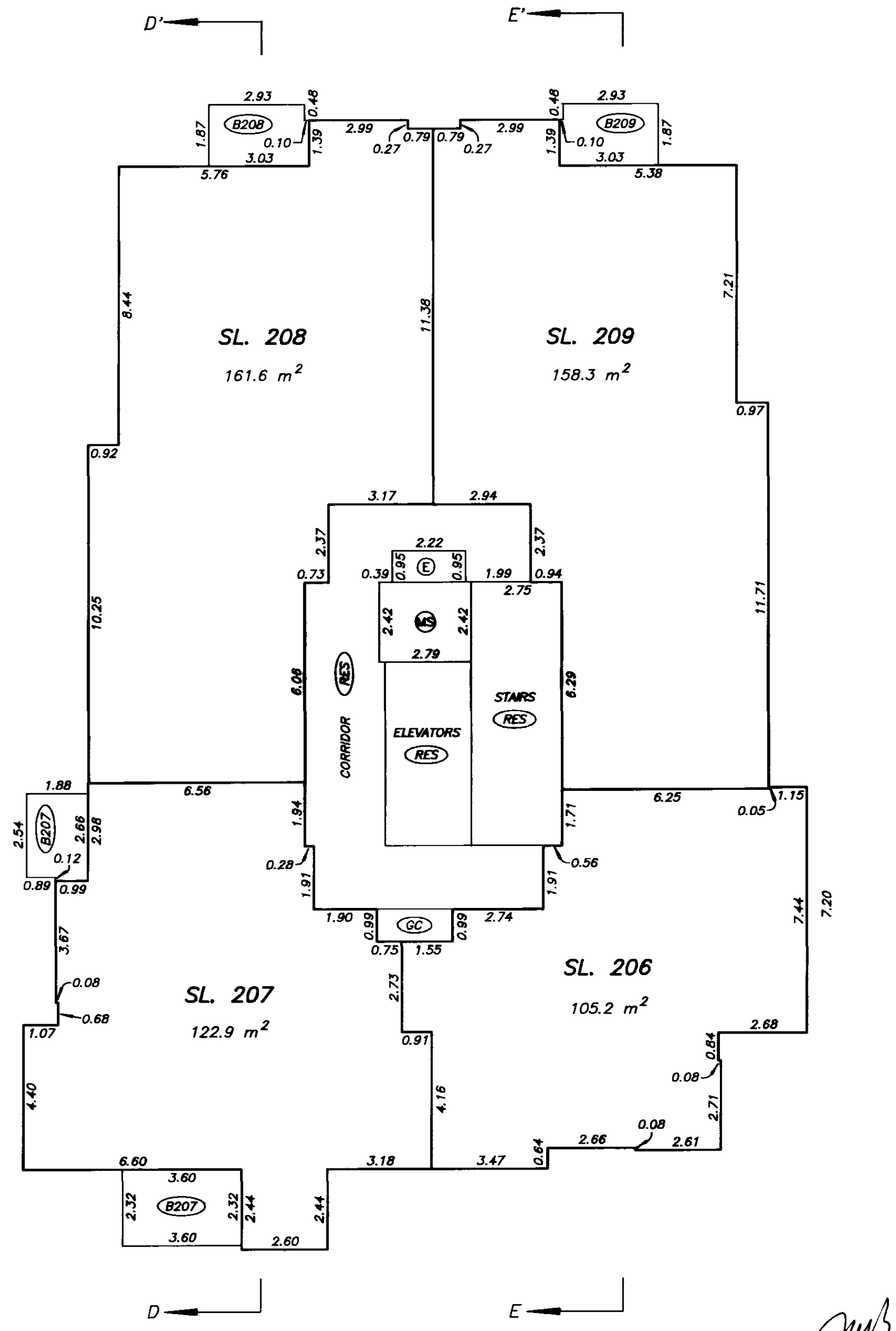

DATE : SEPTEMBER 26, 2003

DRAWING # 30376-10
FILE # 30376-10_B2L14

FILED VABCS535 M37352 2004-01-02-13.18.56.751200

FIFTEENTH LEVEL FLOOR PLAN

BUILDING 2

STRATA PLAN BCS 535

SCALE 1:125

2 0 2 4

ALL DISTANCES ARE IN METRES.

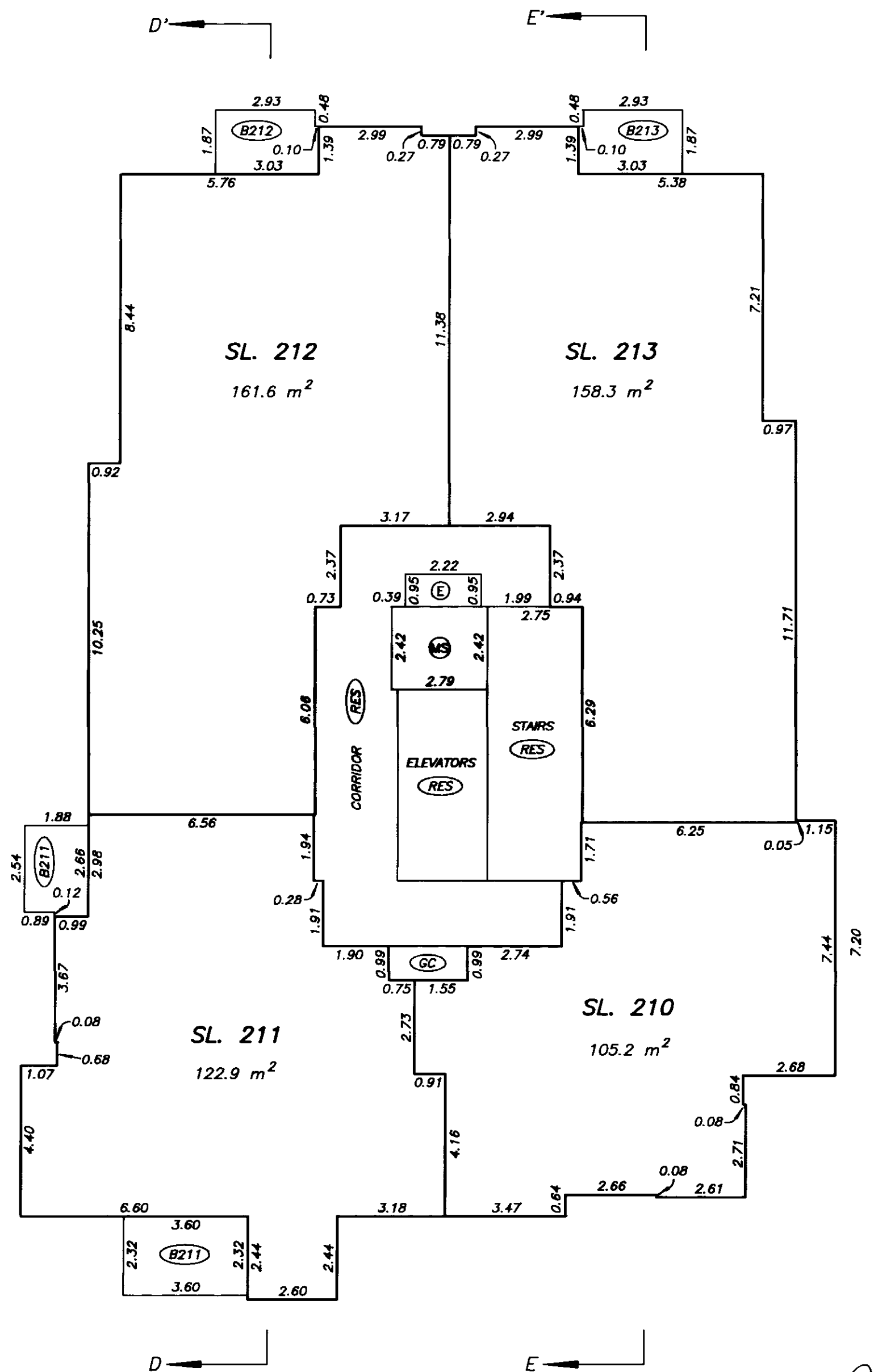

DATE : SEPTEMBER 26, 2003

DRAWING # 30376-10
FILE # 30376-10_B2L15

FILED VABCS535 M37352 2004-01-02-13.18.56.751200

SIXTEENTH LEVEL FLOOR PLAN

BUILDING 2

STRATA PLAN BCS 535

SCALE 1:125

2 0 2 4

ALL DISTANCES ARE IN METRES.

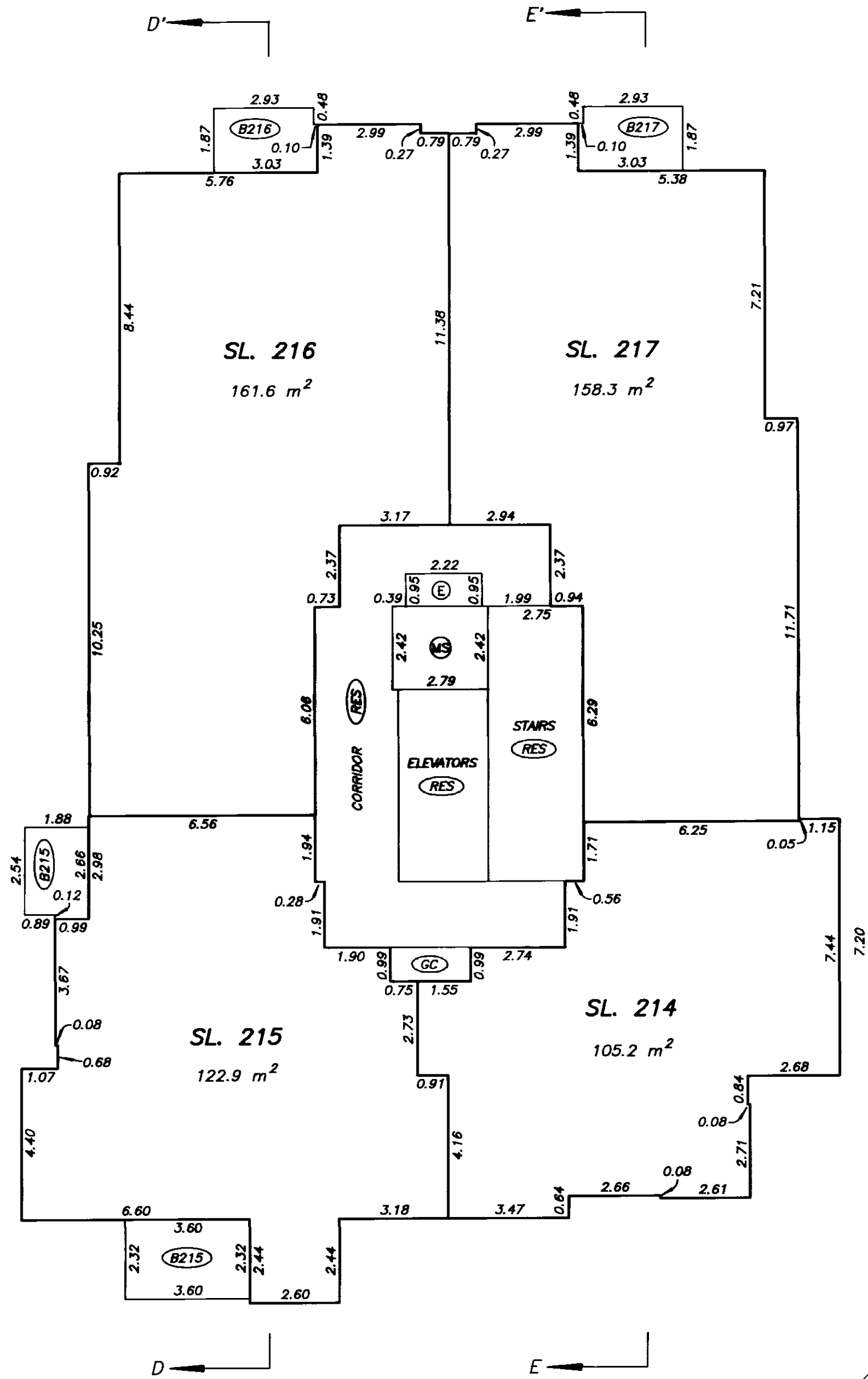

DATE : SEPTEMBER 26, 2003

DRAWING # 30376-10
FILE # 30376-10_B2L16

FILED VABCS535 M37352 2004-01-02-13.18.56.751200

SEVENTEENTH LEVEL FLOOR PLAN

BUILDING 2

STRATA PLAN BCS 535

SCALE 1:125

2 0 2 4

ALL DISTANCES ARE IN METRES.

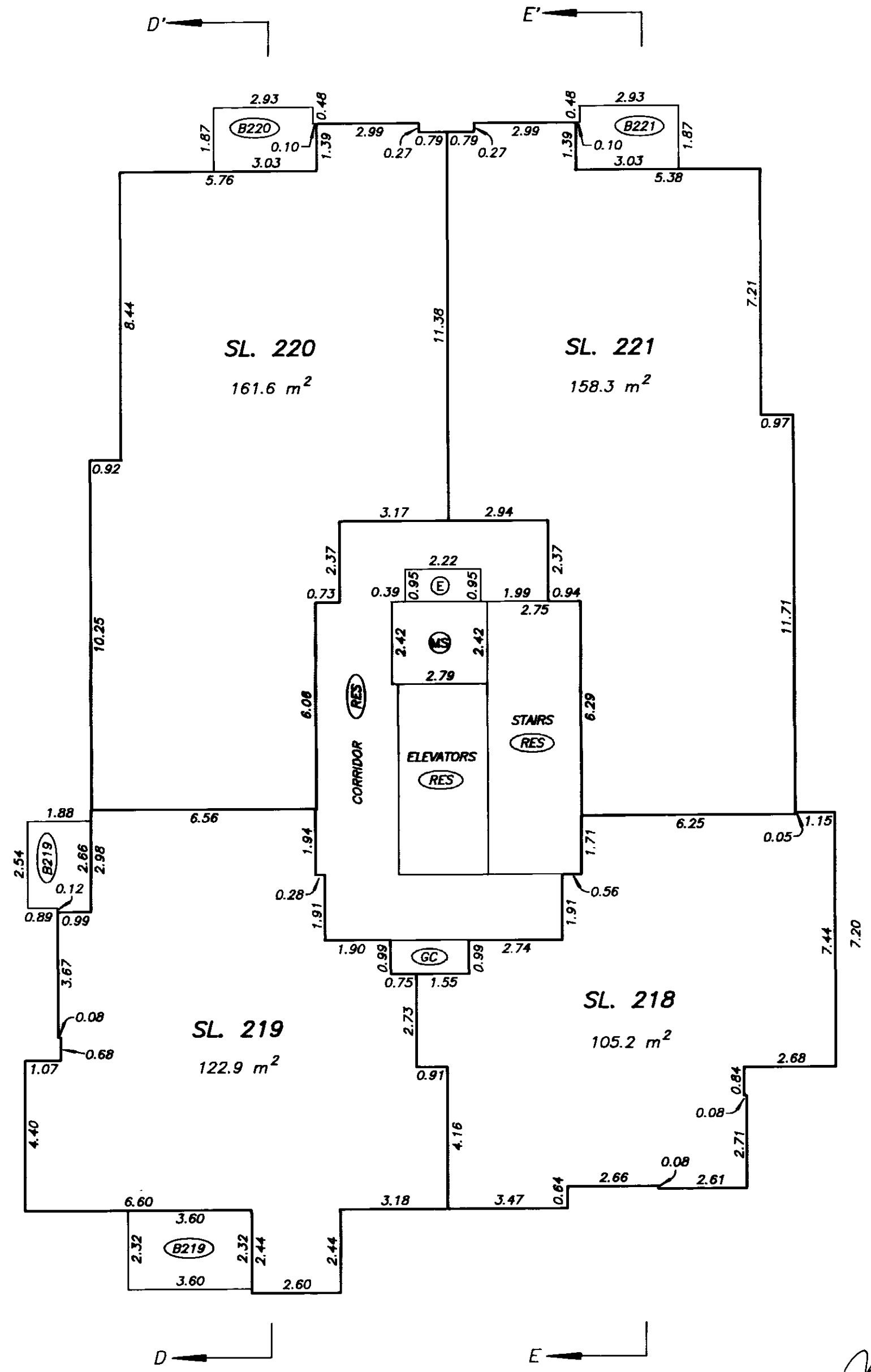

DATE : SEPTEMBER 26, 2003

DRAWING # 30376-10
FILE # 30376-10_B2L17

FILED VABCS535 M37352 2004-01-02-13.18.56.751200

EIGHTEENTH LEVEL FLOOR PLAN

BUILDING 2

STRATA PLAN BCS 535

SCALE 1:125

2 0 2 4

ALL DISTANCES ARE IN METRES.

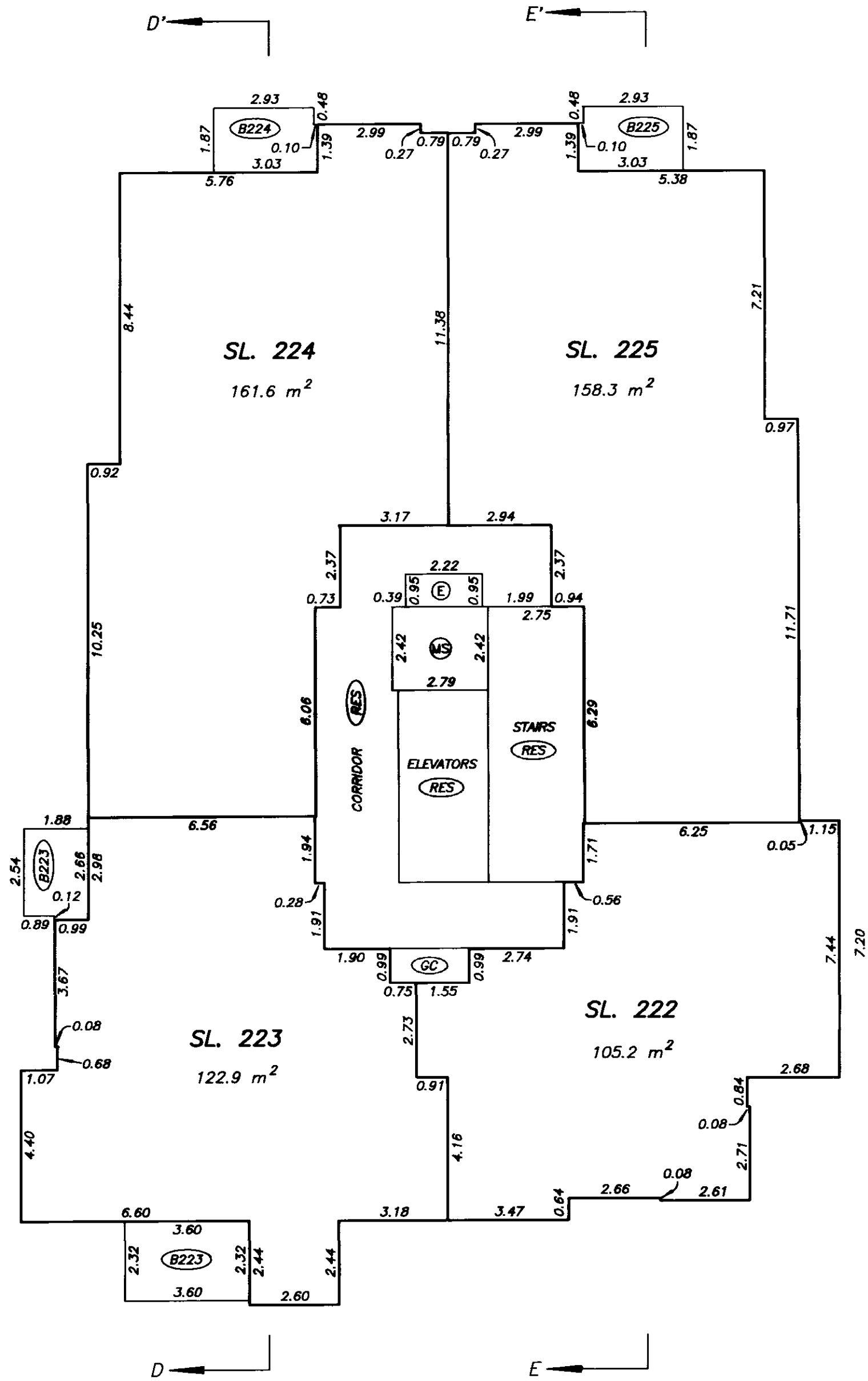

DATE : SEPTEMBER 26, 2003

DRAWING # 30376-10
FILE # 30376-10_B2L18

FILED VABC5535 M37352 2004-01-02-13.18.56.751200

NINETEENTH LEVEL FLOOR PLAN BUILDING 2

STRATA PLAN BCS 535

SCALE 1:125

2 0 2 4

ALL DISTANCES ARE IN METRES.

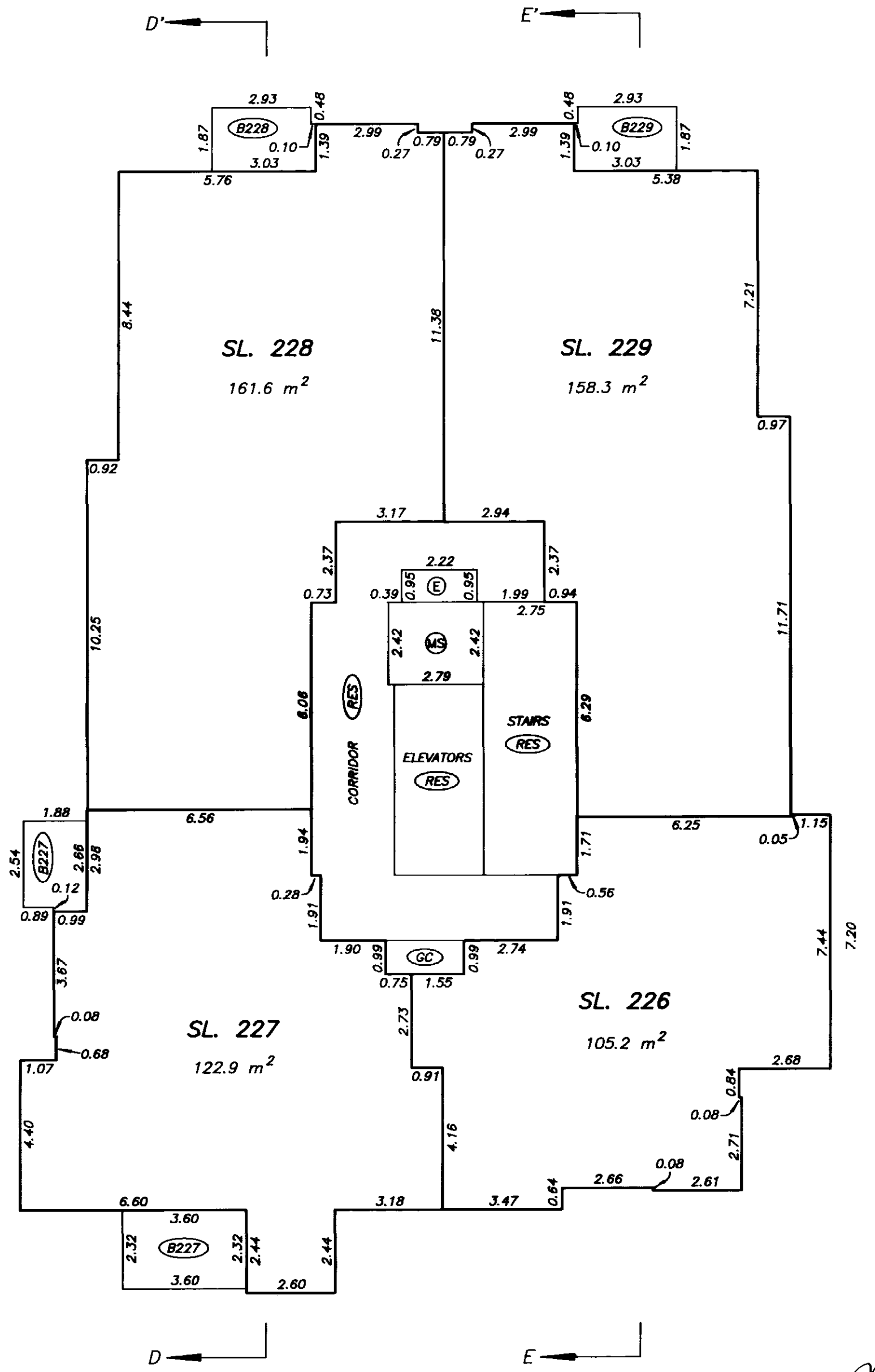

DATE : SEPTEMBER 26, 2003

DRAWING # 30376-10
FILE # 30376-10_B2L19

FILED VABCS535 M37352 2004-01-02-13.18.56.751200

TWENTIETH LEVEL FLOOR PLAN

BUILDING 2

STRATA PLAN BCS 535

SCALE 1:125

2 0 2 4

ALL DISTANCES ARE IN METRES.

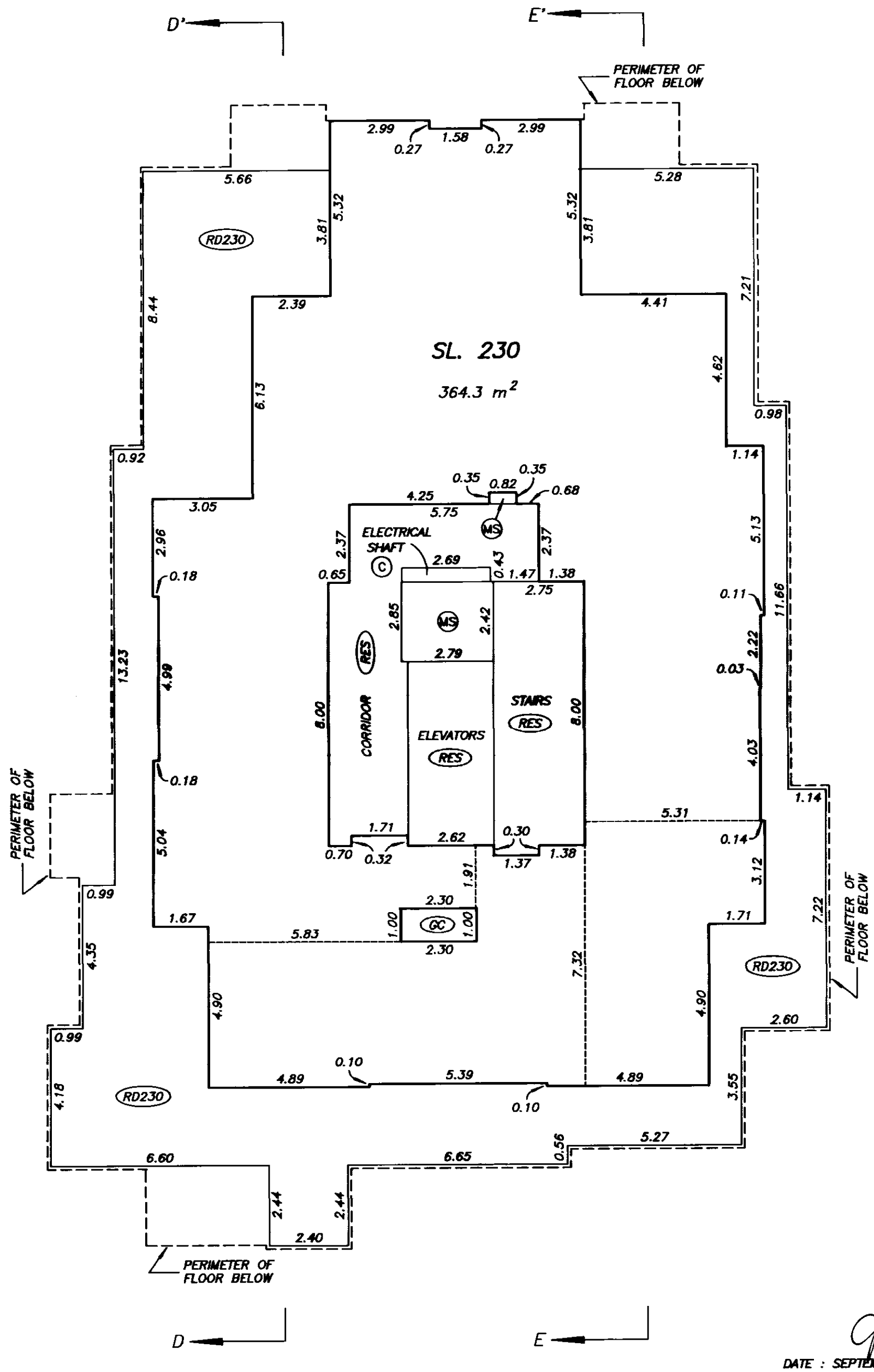

DATE : SEPTEMBER 26, 2003

DRAWING # 30376-10
FILE # 30376-10_B2L20

FILED VABCS535 M37352 2004-01-02-13.18.56.751200

MECHANICAL ROOM LEVEL FLOOR PLAN

BUILDING 2

STRATA PLAN BCS 535

SCALE 1:125

2 0 2 4

ALL DISTANCES ARE IN METRES.

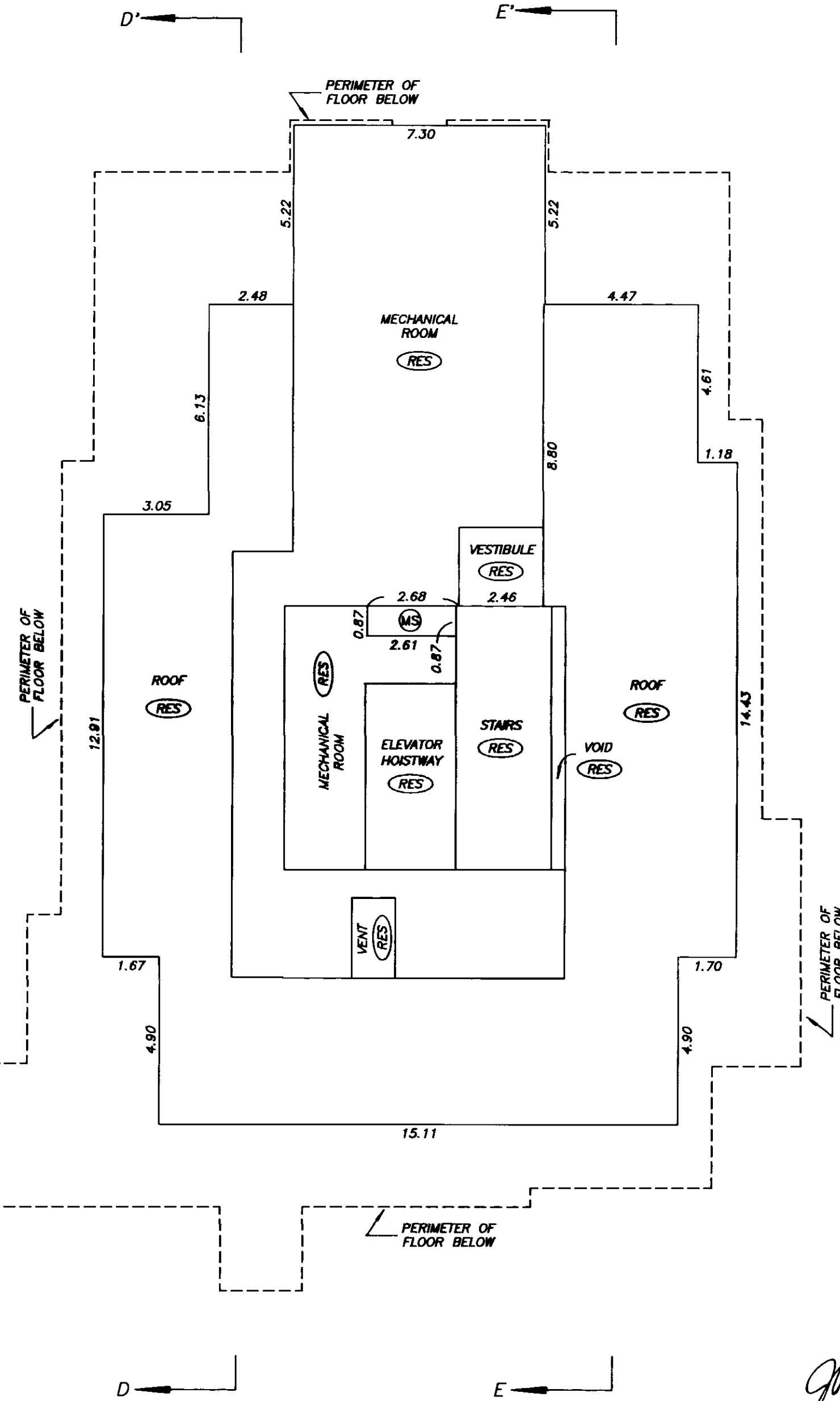

DATE : SEPTEMBER 26, 2003

DRAWING # 30376-10
FILE # 30376-10_B2MRL

FILED VABCS535 M37352 2004-01-02-13.18.56.751200

ELEVATOR MACHINE ROOM LEVEL FLOOR PLAN

BUILDING 2

STRATA PLAN BCS 535'

SCALE 1:125

2 0 2 4

ALL DISTANCES ARE IN METRES.

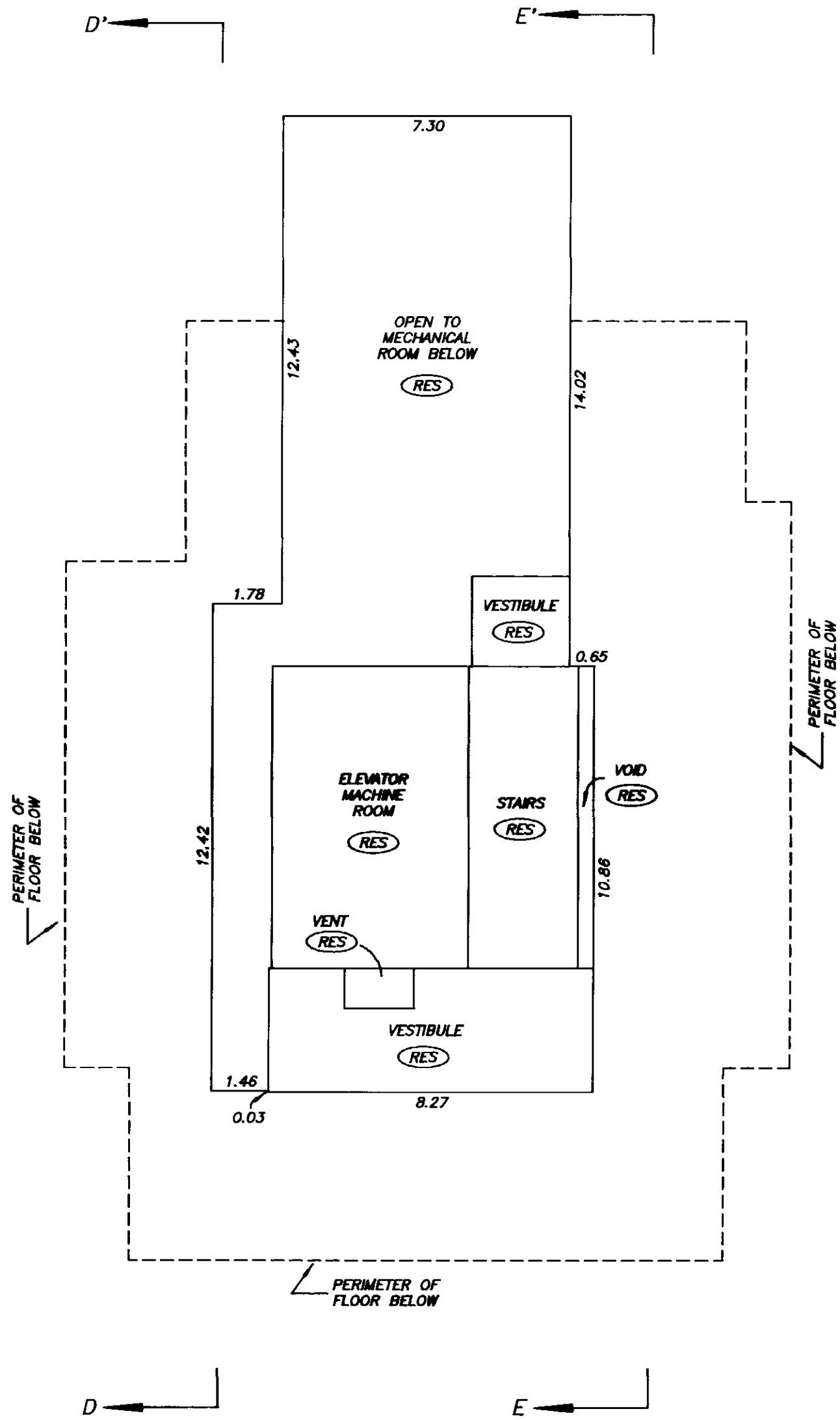

DATE : SEPTEMBER 26, 2003

DRAWING # 30376-10
FILE # 30376-10_B2EMR

FILED VABC5535 M37352 2004-01-02-13.18.56.751200

ROOF LEVEL PLAN

BUILDING 2

STRATA PLAN BCS 535

SCALE 1:125

2 0 2 4

ALL DISTANCES ARE IN METRES.

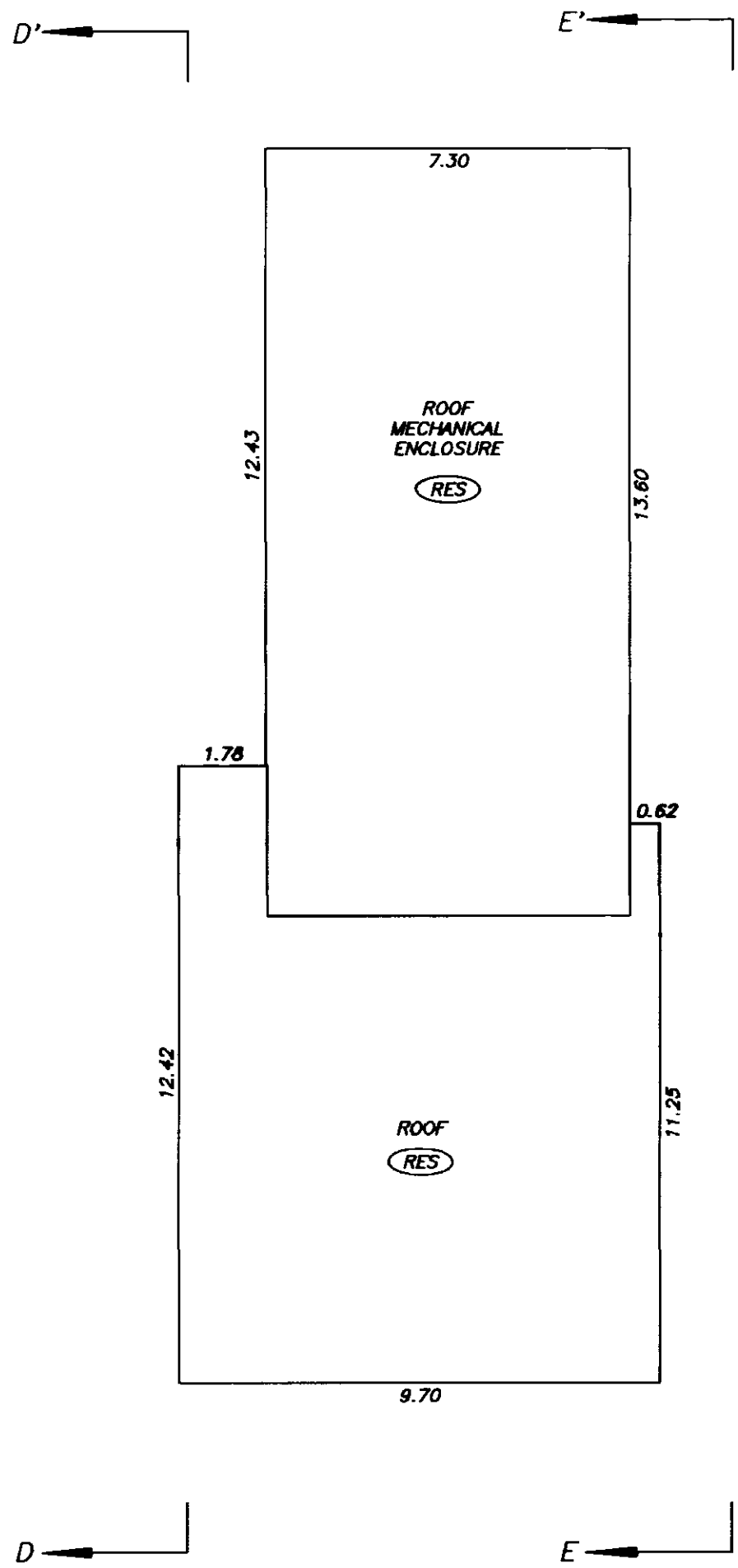

DATE : SEPTEMBER 26, 2003

DRAWING # 30376-10
FILE # 30376-10_B2RL

FILED VABCS535 M37352 2004-01-02-13.18.56.751200

SECOND LEVEL FLOOR PLAN DETAIL "Y'
BUILDING 3 (TOWNHOUSES)

STRATA PLAN BCS 535

SCALE 1:125

2 0 2 4

ALL DISTANCES ARE IN METRES.

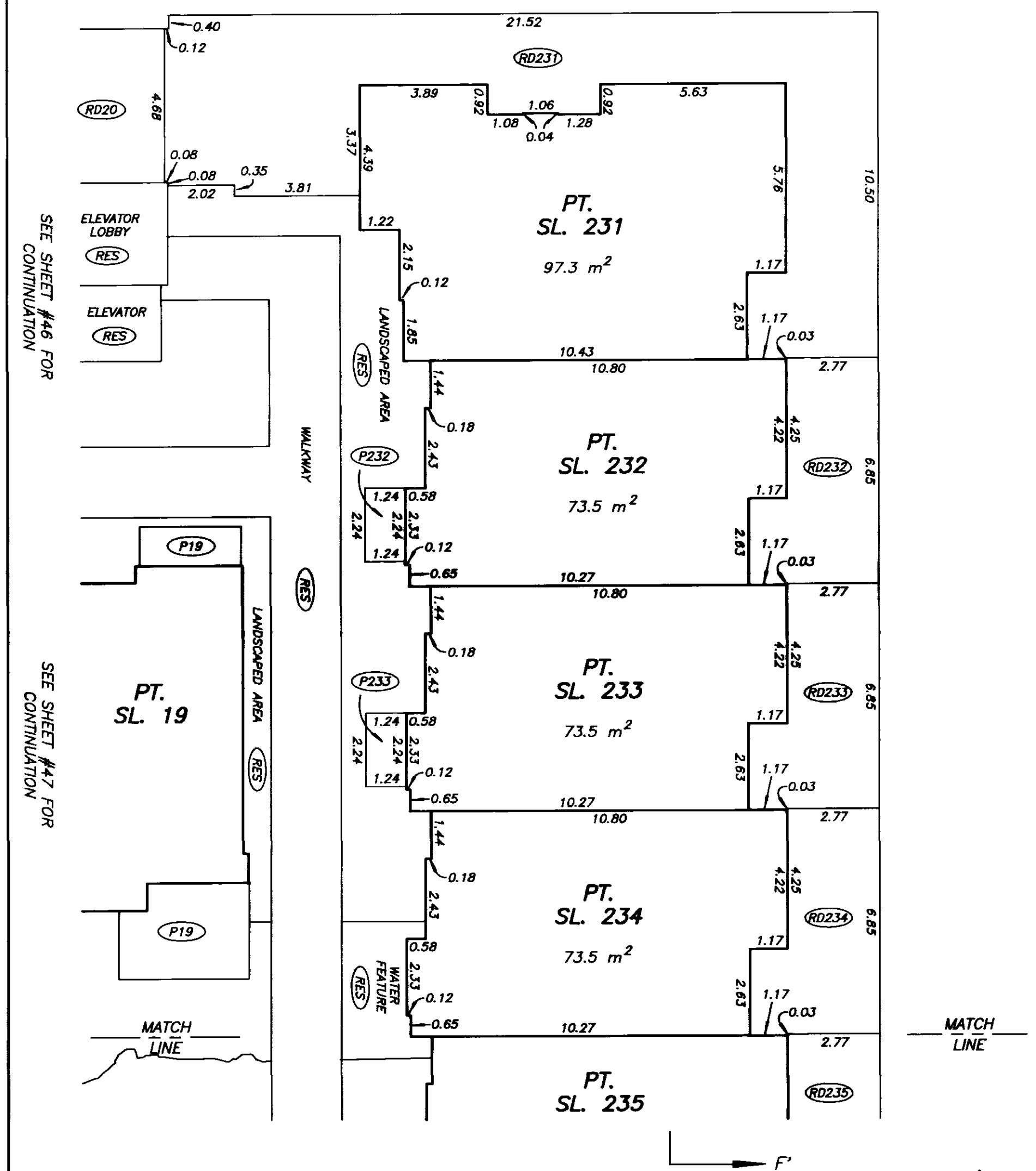

SEE SHEET #111 FOR CONTINUATION

DATE : SEPTEMBER 26, 2003

DRAWING # 30376-10
FILE # 30376-10_B3

FILED VABCS535 M37352 2004-01-02-13.18.56.751200

SECOND LEVEL FLOOR PLAN DETAIL "Z" BUILDING 3 (TOWNHOUSES)

STRATA PLAN BCS 535

SCALE 1:125

2 0 2 4

ALL DISTANCES ARE IN METRES.

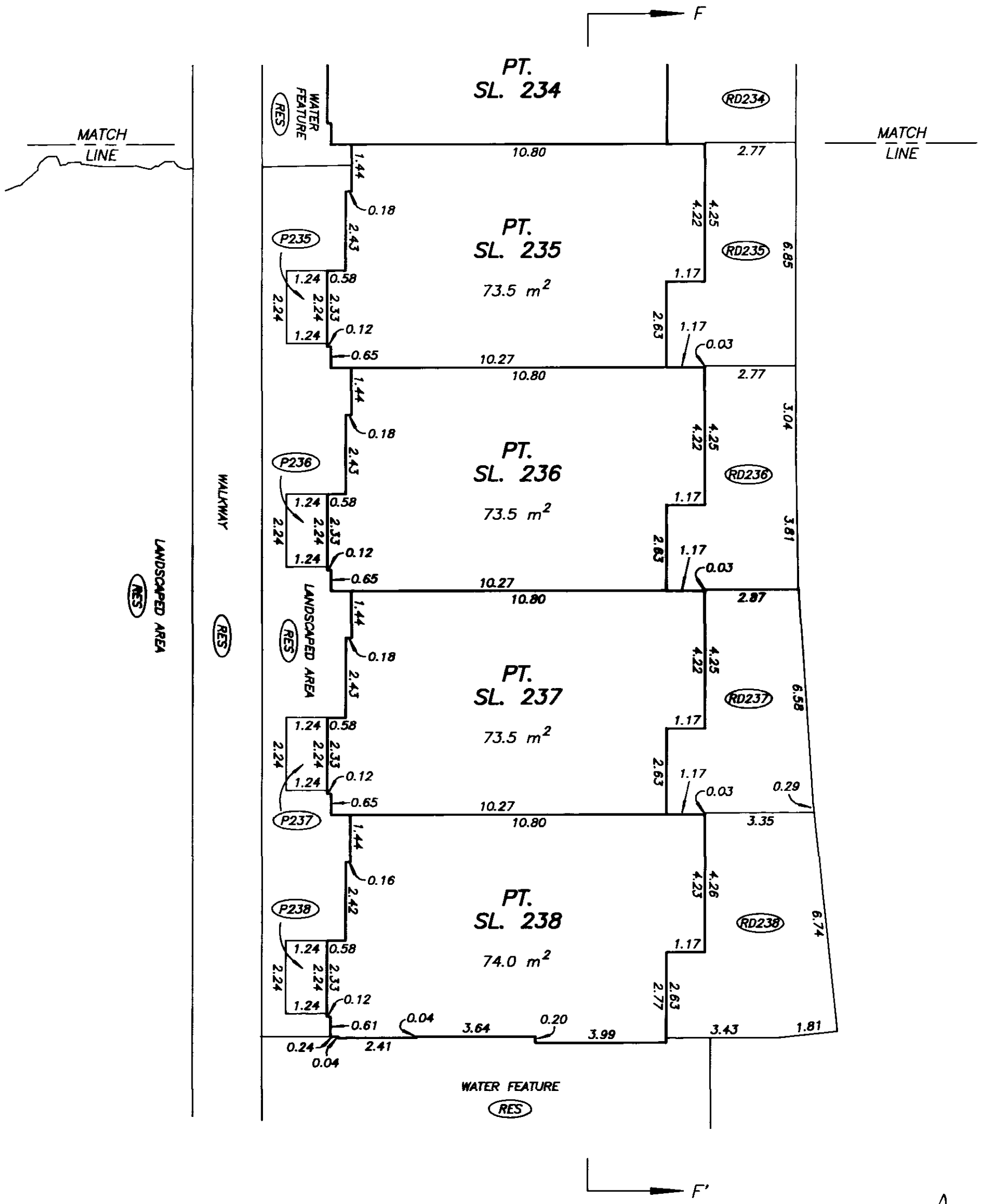

DATE : SEPTEMBER 26, 2003

DRAWING # 30376-10
FILE # 30376-10_B3

FILED VABCS535 M37352 2004-01-02-13.18.56.751200

THIRD LEVEL FLOOR PLAN DETAIL "AA" BUILDING 3 (TOWNHOUSES)

STRATA PLAN BCS 535

SCALE 1:125

2 0 2 4

ALL DISTANCES ARE IN METRES.

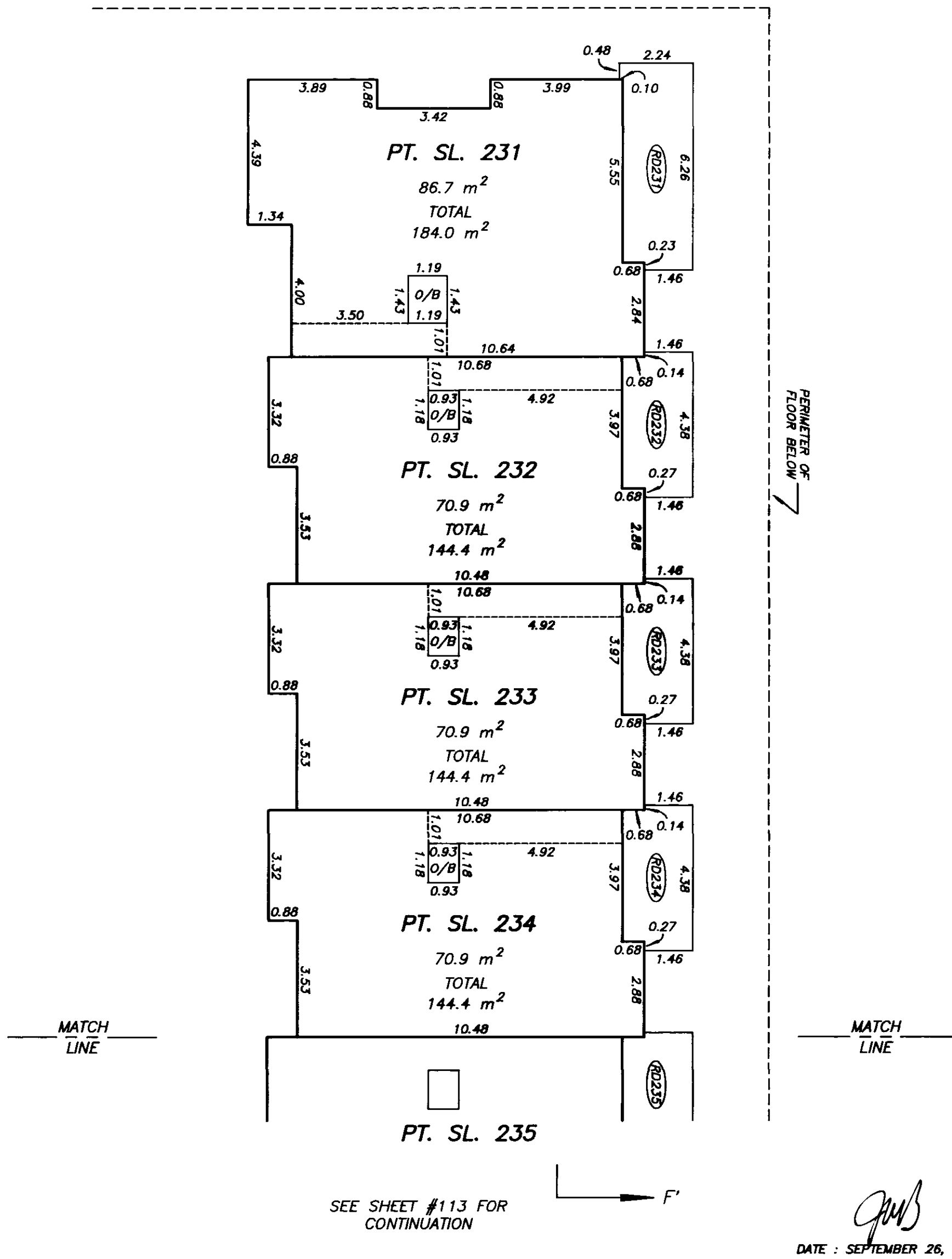

SEE SHEET #113 FOR CONTINUATION

DATE : SEPTEMBER 26, 2003

DRAWING # 30376-10
FILE # 30376-10_B3

FILED VABC5535 M37352 2004-01-02-13.18.56.751200

THIRD LEVEL FLOOR PLAN DETAIL "AB" BUILDING 3 (TOWNHOUSES)

STRATA PLAN BCS 535

SCALE 1:125

2 0 2 4

ALL DISTANCES ARE IN METRES.

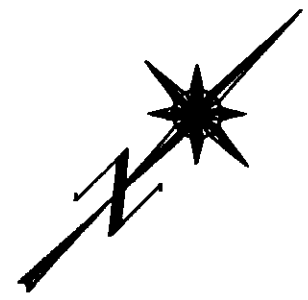

SEE SHEET #112 FOR CONTINUATION

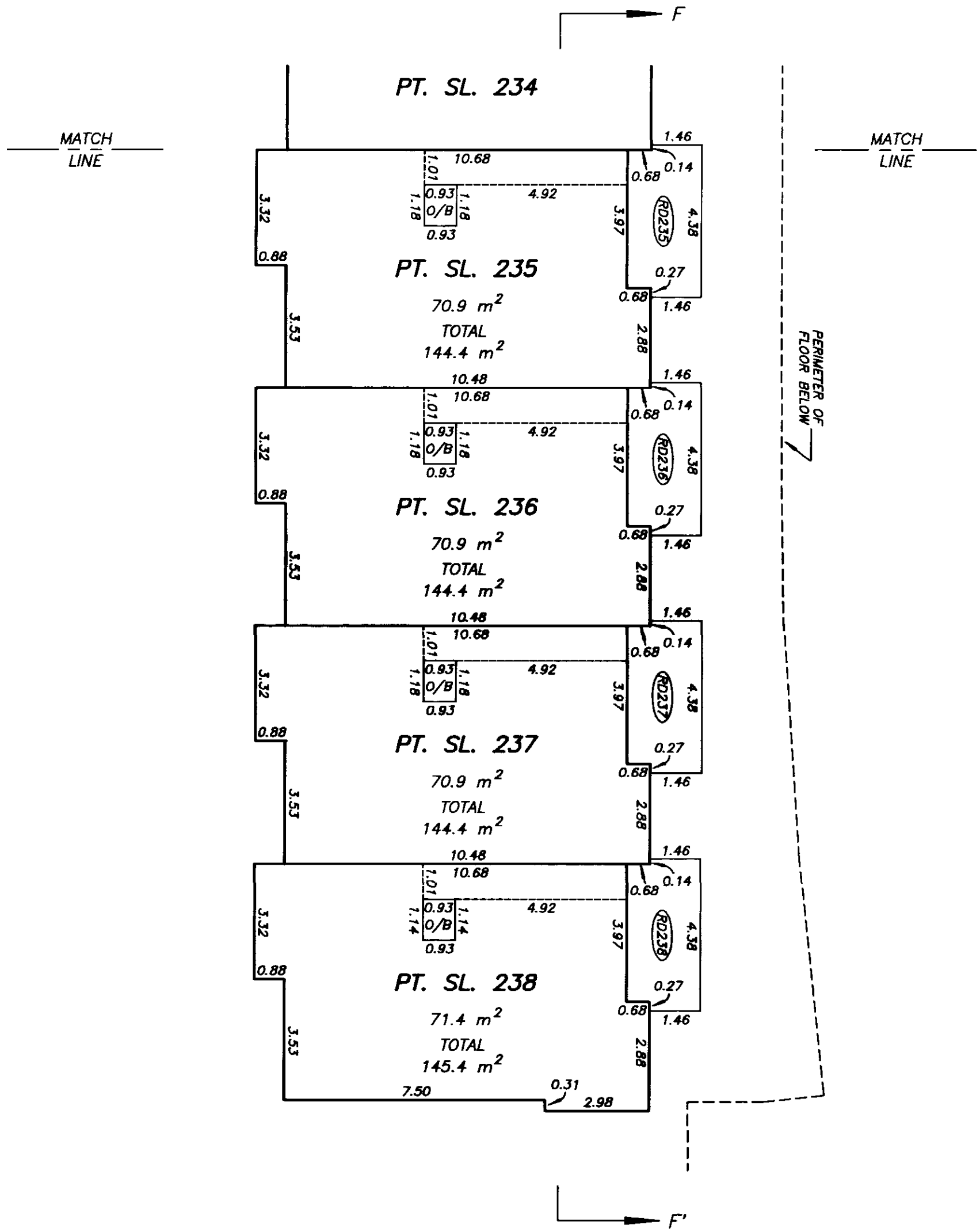

DATE : SEPTEMBER 26, 2003

DRAWING # 30376-10
FILE # 30376-10_B3

FILED VABCS535 M37352 2004-01-02-13.18.56.751200

FOURTH LEVEL FLOOR PLAN DETAIL "AC" BUILDING 3 (TOWNHOUSES)

STRATA PLAN BCS 535

SCALE 1:125

2 0 2 4

ALL DISTANCES ARE IN METRES.

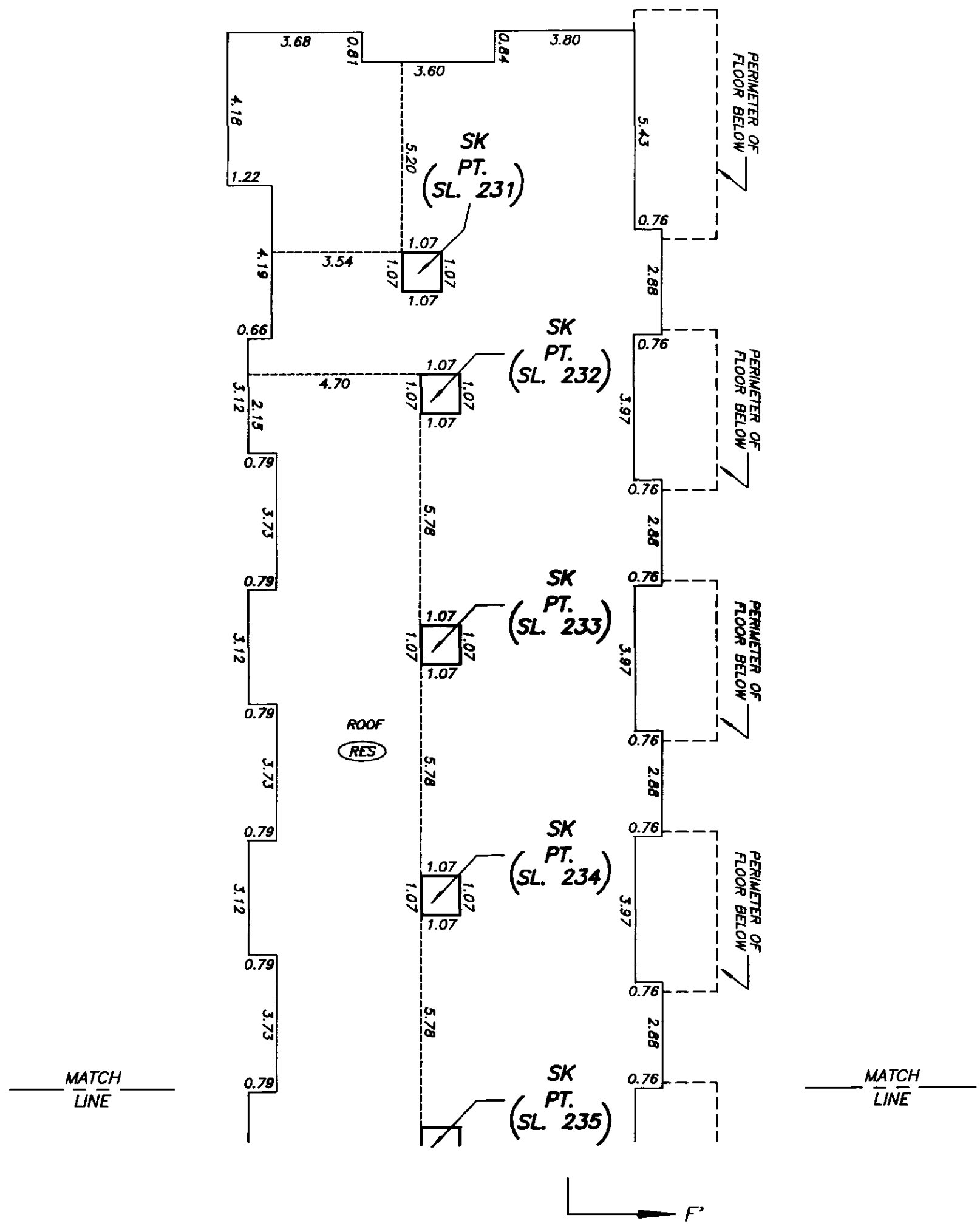

SEE SHEET #115 FOR CONTINUATION

DATE : SEPTEMBER 26, 2003

DRAWING # 30376-10
FILE # 30376-10_B3

FILED VABCS535 M37352 2004-01-02-13.18.56.751200

FOURTH LEVEL FLOOR PLAN DETAIL "AD" BUILDING 3 (TOWNHOUSES)

STRATA PLAN BCS 535

SCALE 1:125

2 0 2 4

ALL DISTANCES ARE IN METRES.

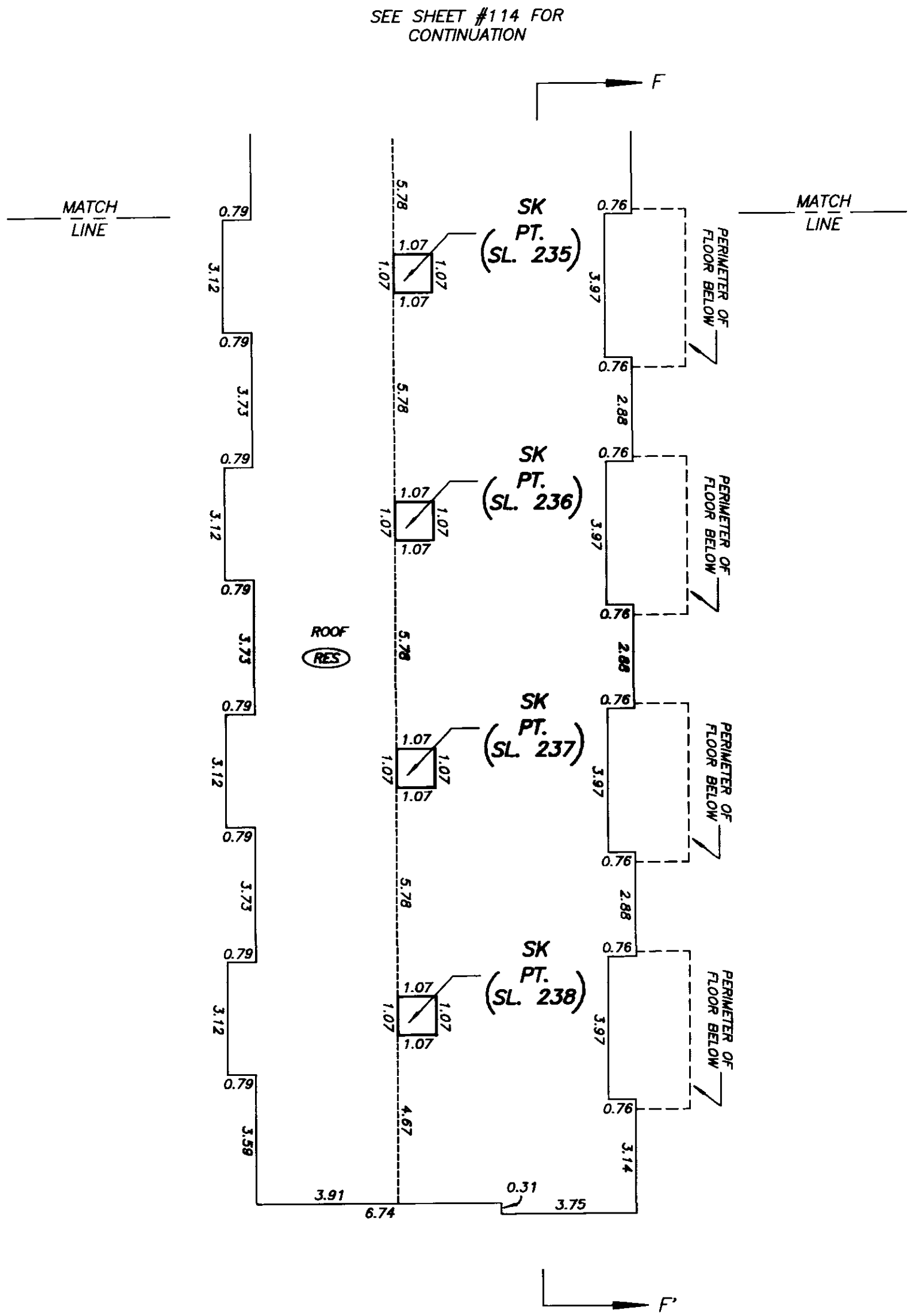

DATE : SEPTEMBER 26, 2003

DRAWING # 30376-10
FILE # 30376-10_B3

FILED VABCS535 M37352 2004-01-02-13.18.56.751200

PARKING LEVEL GP FLOOR PLAN DETAIL "AE" BUILDING 3 (COMMERCIAL UNITS)

STRATA PLAN BCS 535

SCALE 1:125

2 0 2 4

ALL DISTANCES ARE IN METRES.

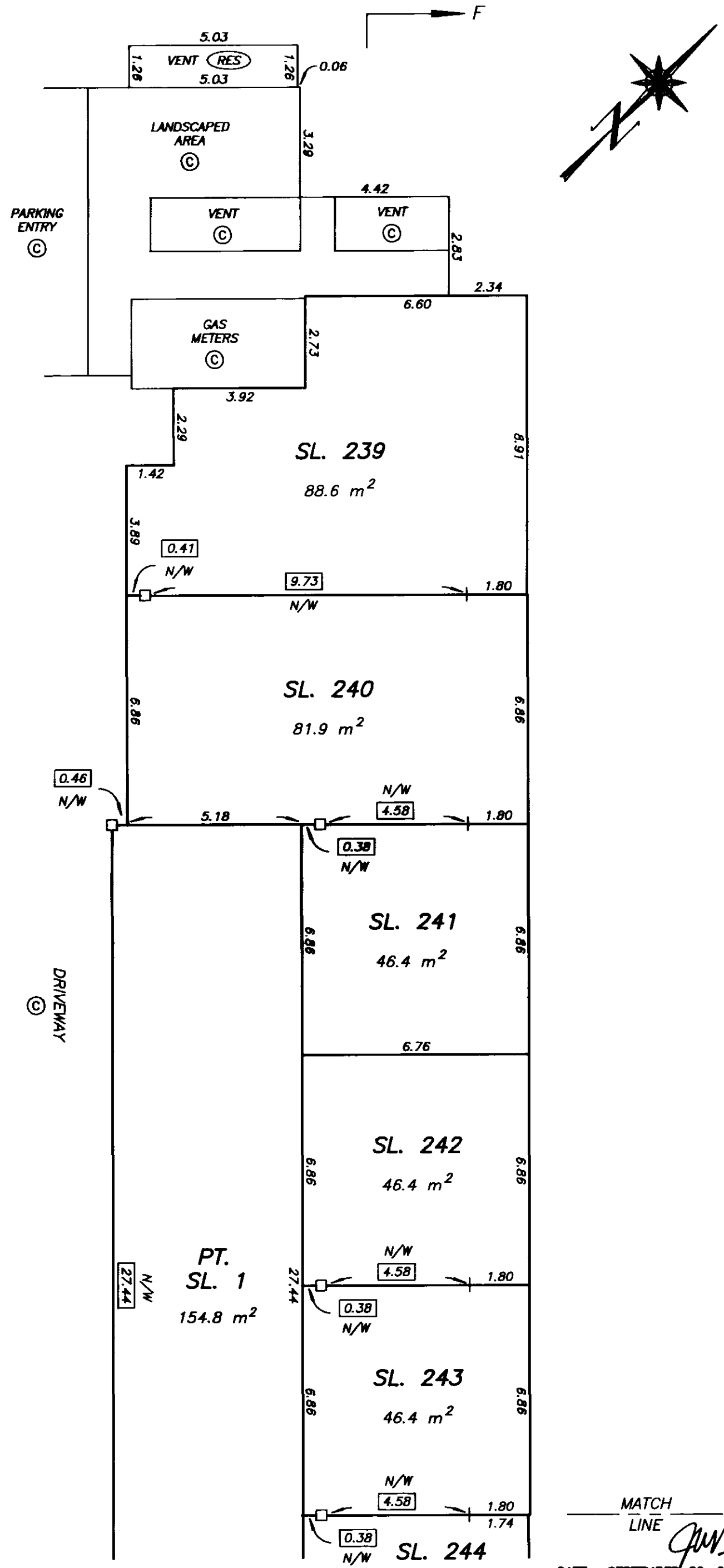

SEE SHEET #117 FOR CONTINUATION

DATE : SEPTEMBER 26, 2003

DRAWING # 30376-10
FILE # 30376-10_Com

FILED VABCS535 M37352 2004-01-02-13.18.56.751200

PARKING LEVEL GP FLOOR PLAN DETAIL "AF"

BUILDING 3 (COMMERCIAL UNITS)

STRATA PLAN BCS 535

SCALE 1:125

2 0 2 4

ALL DISTANCES ARE IN METRES.

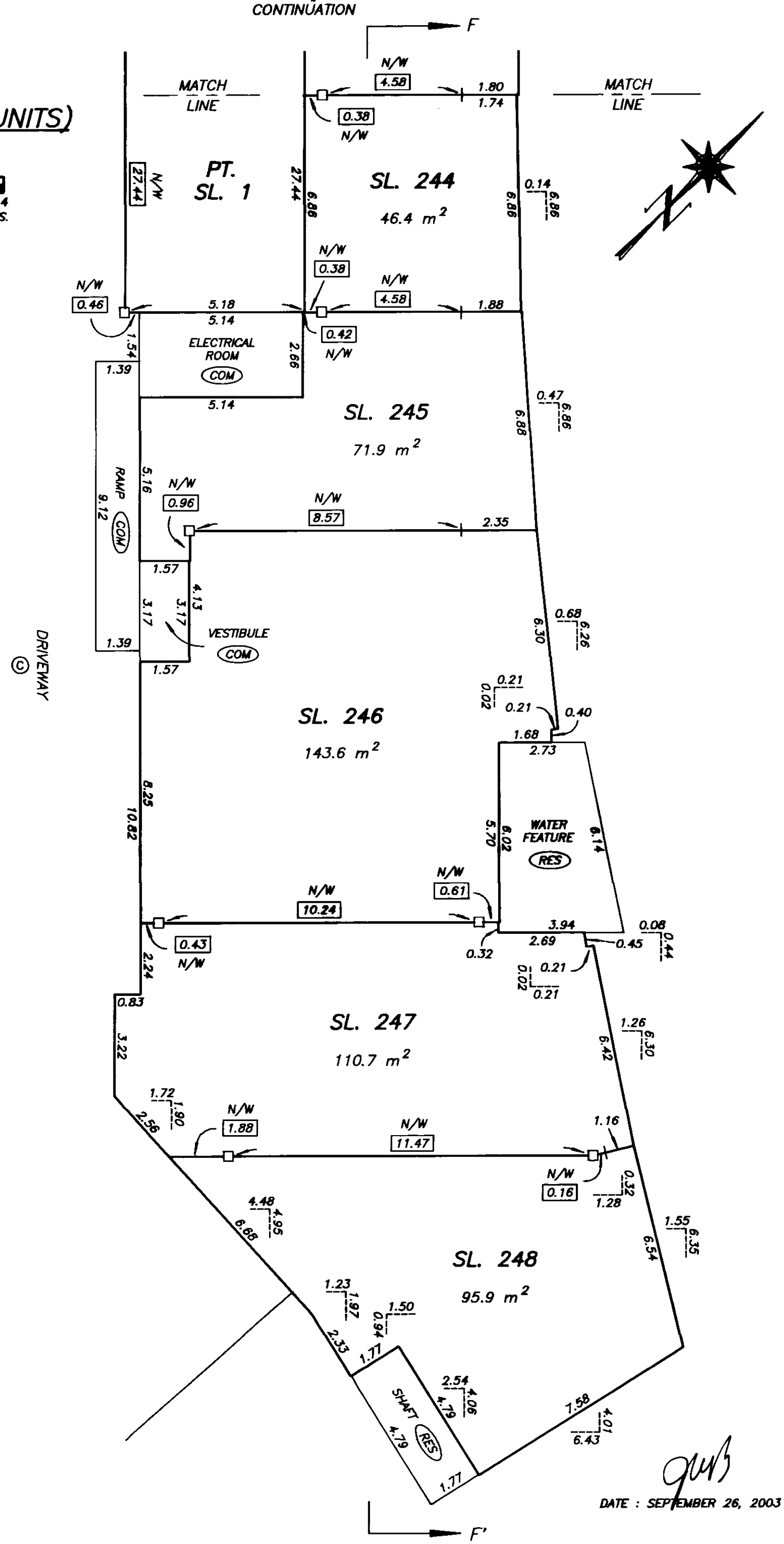

DATE : SEPTEMBER 26, 2003

DRAWING # 30376-10
FILE # 30376-10_Com

FILED VABCS535 M37352 2004-01-02-13.18.56.751200