14-326

STRATA PLAN OF LOT 1, SECTION 26, BLOCK 5 NORTH, RANGE 2 WEST, PLAN 67396 NEW WESTMINSTER DISTRICT.

MUNICIPALITY OF SURREY.

STRATA PLAN NW 2438

Deposited and registered in the Land Title Office at New Westminster, B.C. this 21 day of August 1986.

E J Raven per San
Registrar

2156478E to 2156511E

KEY PLAN

SCALE 1:500

10m 5 0m 10 20m

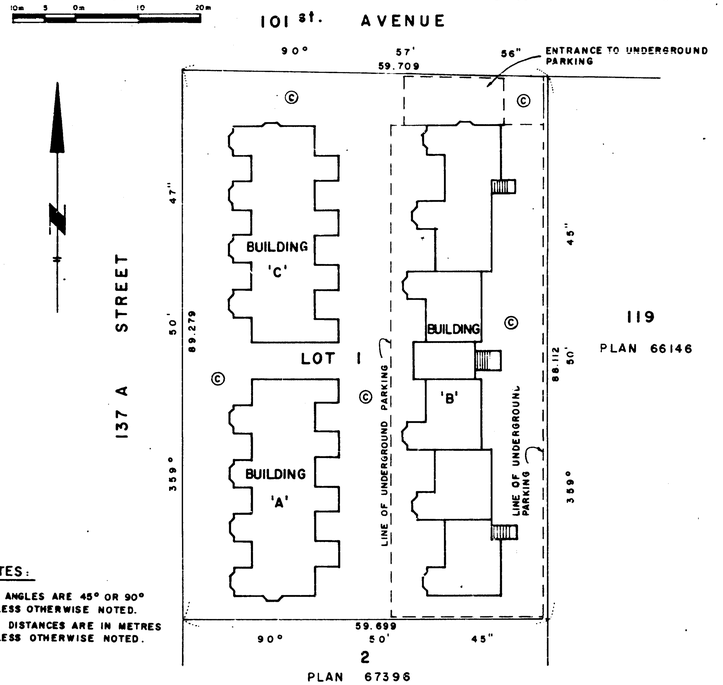

NOTES:

- ALL ANGLES ARE 45° OR 90° UNLESS OTHERWISE NOTED.
- ALL DISTANCES ARE IN METRES UNLESS OTHERWISE NOTED.

LEGEND:

Bearings are astromic and are derived from Plan 67396.

©	DENOTES	COMMON PROPERTY.
SL.	DENOTES	STRATA LOT.
LCP	DENOTES	LIMITED COMMON PROPERTY.
S	DENOTES	STAIRS.
P	DENOTES	PATIO.
PT.SL.	DENOTES	PART OF STRATA LOT.
E.	DENOTES	ELEVATOR.
ER.	DENOTES	ELECTRICAL ROOM.
EL.	DENOTES	ELEVATOR LOBBY.
MR.	DENOTES	MECHANICAL ROOM.
W	DENOTES	WASHROOMS.
B	DENOTES	BALCONY.
PCH.	DENOTES	PORCH.
RD.	DENOTES	ROOF DECK.
EMR	DENOTES	ELECTRICAL MACHINE ROOM.

THE ADDRESS FOR SERVICE OF DOCUMENTS ON THE STRATA CORPORATION IS:

THE OWNERS OF STRATA PLAN NW. _____
C/o #401 - 1770 WEST 7TH. AVENUE
VANCOUVER, B.C.
V6J 4Z4

NAME OF DEVELOPMENT:

CAMDEN COURT

CIVIC ADDRESS:

10050, 10070 & 10090 - 137A STREET
SURREY, B.C.

I, Lorne D. Semanowich, of Vancouver, British Columbia Land Surveyor, hereby certify that the buildings erected on the parcel described above is wholly within the external boundaries of that parcel.

Dated this 17TH day of JUNE, 1986.

Lorne D Semanowich B.C.L.S.

MORGAN STEWART AND COMPANY
Surveyors and Engineers
760 Denman St, Vancouver, B.C.

DWG 15354

FILE: 3794

STRATA PLAN _____

CONDOMINIUM ACT

Lot No.	Sheet No.	FORM 1 SCHEDULE OF UNIT ENTITLEMENT: UNIT ENTITLEMENT	FORM 2 SCHEDULE OF INTEREST UPON DESTRUCTION: INTEREST	FORM 3 SCHEDULE OF VOTING RIGHTS: NUMBER OF VOTES
1	7	119	829	1
2	7	118	809	1
3	7	118	809	1
4	7	117	819	1
5	8	119	839	1
6	8	118	819	1
7	8	118	819	1
8	8	117	839	1
9	11	122	879	1
10	11	121	819	1
11	11	121	809	1
12	12	121	809	1
13	12	121	819	1
14	12	123	899	1
15	13	122	859	1
16	13	121	799	1
17	13	121	789	1
18	14	121	789	1
19	14	121	799	1
20	14	123	879	1
21	15	120	899	1
22	15	119	849	1
23	15	119	839	1
24	16	120	839	1
25	16	119	859	1
26	16	122	929	1
27	17	118	829	1
28	17	119	819	1
29	17	118	819	1
30	17	120	859	1

MORGAN STEWART AND COMPANY
Surveyors and Engineers
760 Denman St, Vancouver, B.C.

DATE JUNE 17/86 B.C.L.S.

FILE: 3794

1

STRATA PLAN _____

CONDOMINIUM ACT

Lot No.	Sheet No.	FORM 1 SCHEDULE OF UNIT ENTITLEMENT: UNIT ENTITLEMENT	FORM 2 SCHEDULE OF INTEREST UPON DESTRUCTION: INTEREST	FORM 3 SCHEDULE OF VOTING RIGHTS: NUMBER OF VOTES
31	18	118	849	1
32	18	119	839	1
33	18	118	839	1
34	18	120	879	1
AGGREGATE		4,071	28,476	34

I / We the undersigned do solemnly declare that

1/ I/We the undersigned am/are the owner - developer, or (in the alternative) the duly authorized agent of the owner - developer.

2/ The strata plan is for residential use only. I/We make this solemn declaration conscientiously believing it to be true, and knowing that it is of the same force and effect as if made under oath.

Authorized Signatory

Declared before me this 2 day of JULY, 1986.

A COMMISSIONER FOR OATHS

Accepted as to forms 1, 2 and 3.
Dated this 14th day of August 1986.

Superintendant of Real Estate
for

I, Lorne D Semenowich a British Columbia land surveyor hereby certify that the building shown in the strata plan has not as of the 17TH day of JUNE, 1986 been previously occupied

Dated at Vancouver, British Columbia this 17TH day of JUNE, 1986.

Lorne D Semenowich B.C.L.S.

Witness TERRY V. SEIBOLD

DATE JUNE 17/86 B.C.L.S.

JOHN G. R. THIRD
Barrister & Solicitor
MACKINNEY ELLOUGH
Witness J. G. R. THIRD

OWNER:

CAMDEN COURT DEVELOPMENT LTD.
(INCORPORATION No 300878)

Authorized Signatory

Authorized Signatory

MORTGAGEES:

COLUMBIA TRUST COMPANY

Authorized Signatory

Authorized Signatory

C.A. EQUITIES LTD.

Authorized Signatory

HARWICH HOLDINGS LTD.

Authorized Signatory

Authorized Signatory

RAFTER BROOK INVESTMENTS LTD.

Authorized Signatory

Authorized Signatory

HAROLD KENNY MADDISON

Authorized Signatory

HAROLD BARNARD ROBERTSON

Authorized Signatory

MORGAN STEWART AND COMPANY
Surveyors and Engineers
760 Denman St, Vancouver, B.C.

DWG 15354

FILE 3794

PLAN SHOWING LOCATION OF BUILDING 'A', 'B' & 'C'

SCALE 1:250

101 st. AVENUE

STRATA PLAN _____

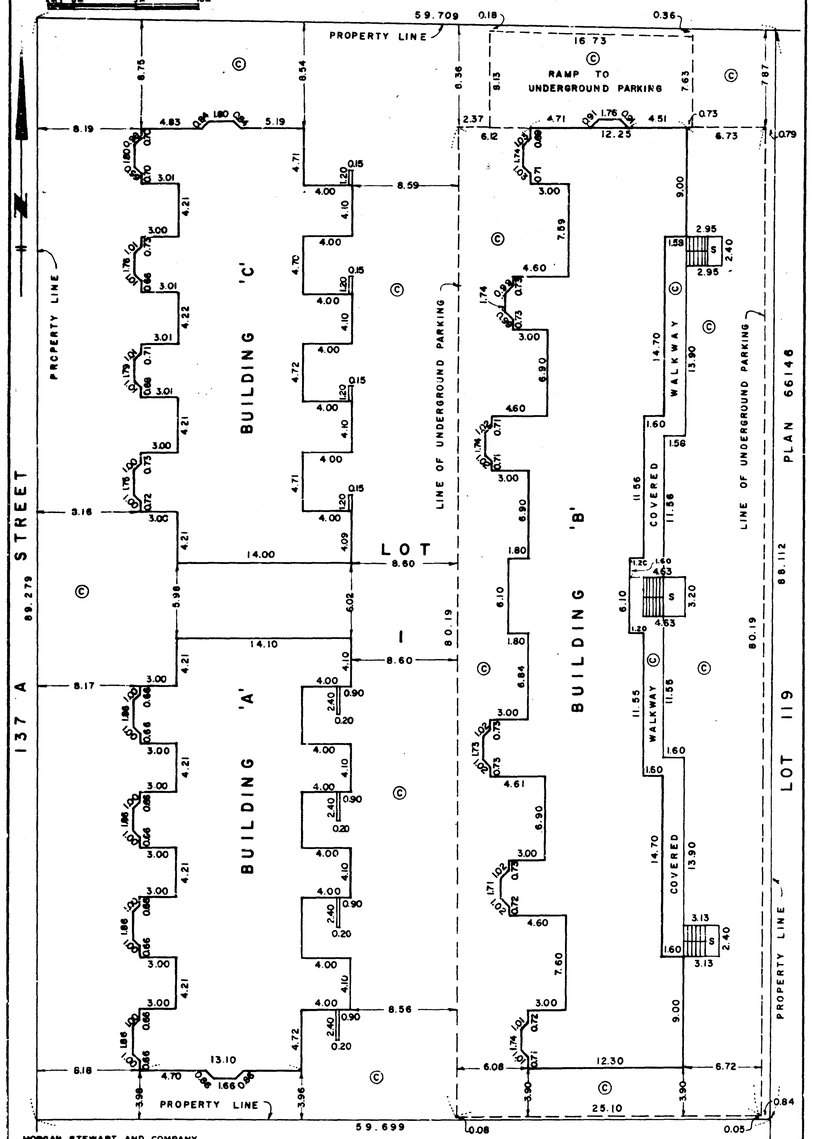

MORGAN STEWART AND COMPANY
Surveyors and Engineers
760 Denman St, Vancouver, B.C.

DATE June 17/86 B.C.L.S.

FILE: 3794

SECTIONS

SCALE 1:200

STRATA PLAN _____

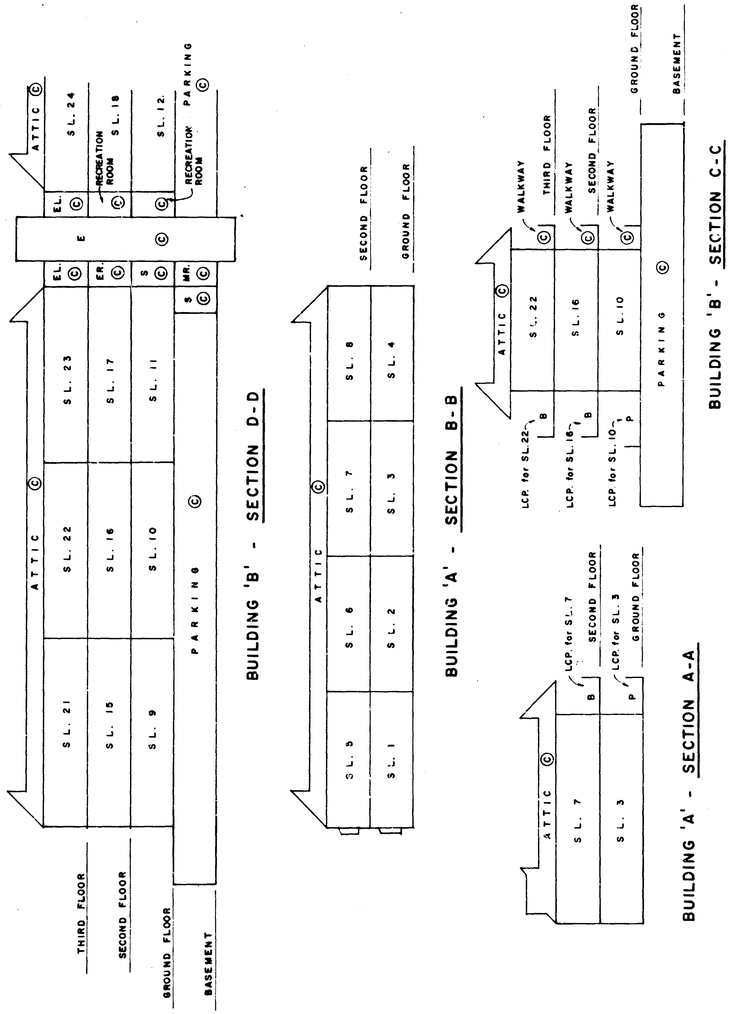

MORGAN STEWART AND COMPANY
Surveyors and Engineers
760 Denman St, Vancouver, B.C.

DATE June 17/86 B.C.L.S.

FILE: 3794

SECTIONS

SCALE 1:200

STRATA PLAN _____

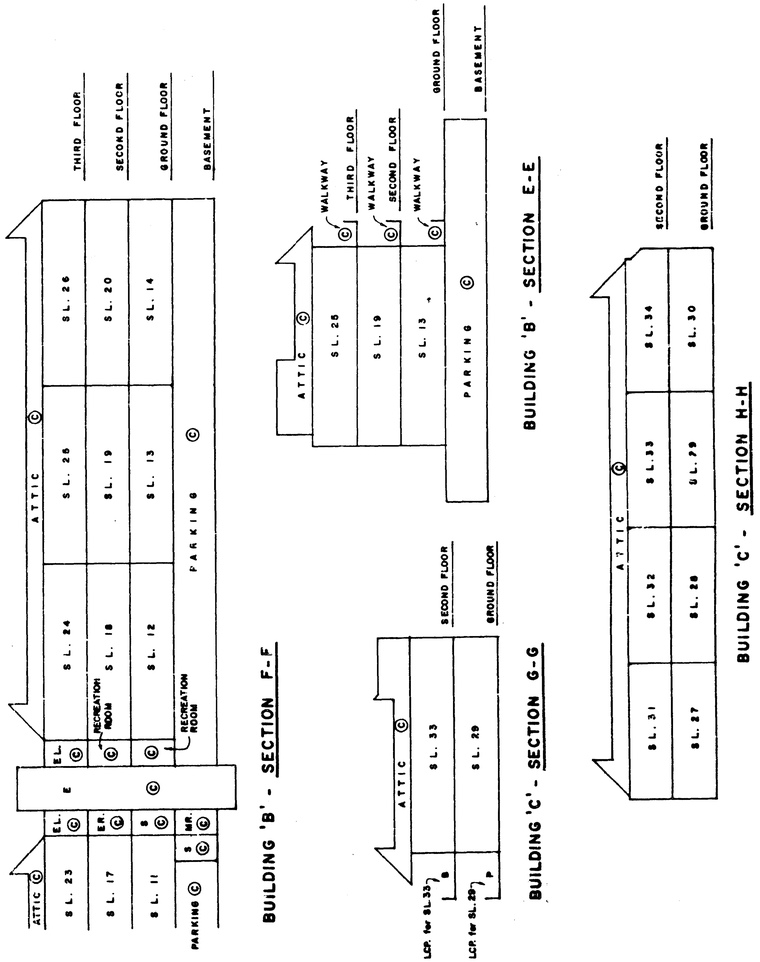

MORGAN STEWART AND COMPANY
Surveyors and Engineers
760 Denman St, Vancouver, B.C.

DATE June 17/86 B.C.L.S.

FILE: 3794

2

STRATA PLAN _____

BUILDING 'A'
GROUND FLOOR
SCALE 1:200

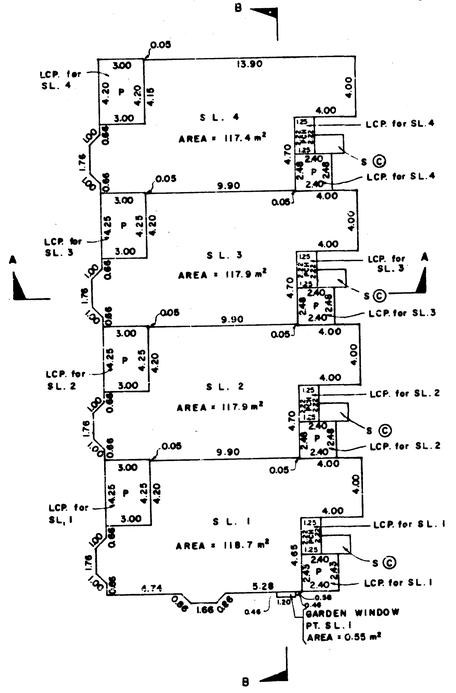

MORGAN STEWART AND COMPANY
Surveyors and Engineers
760 Denman St, Vancouver, B.C.

DATE June 17/86 B.C.L.S

FILE : 3794

D.F.C. 15354

STRATA PLAN _____

BUILDING 'A'
SECOND FLOOR
SCALE 1:200

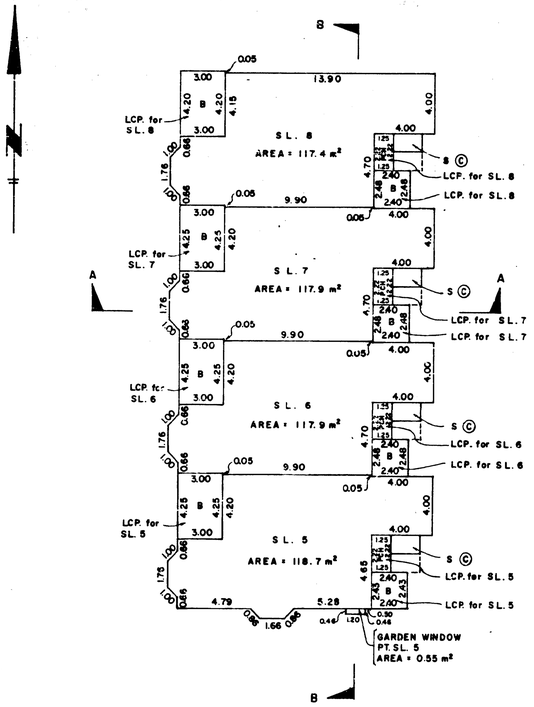

MORGAN STEWART AND COMPANY
Surveyors and Engineers
760 Denman St, Vancouver, B.C.

DATE June 17/86 B.C.L.S

FILE : 3794

D.F.C. 15354

STRATA PLAN _____

BUILDING 'B' - (SOUTH PART)
BASEMENT
SCALE 1:200

FOR CONTINUATION SEE SHEET No. 10

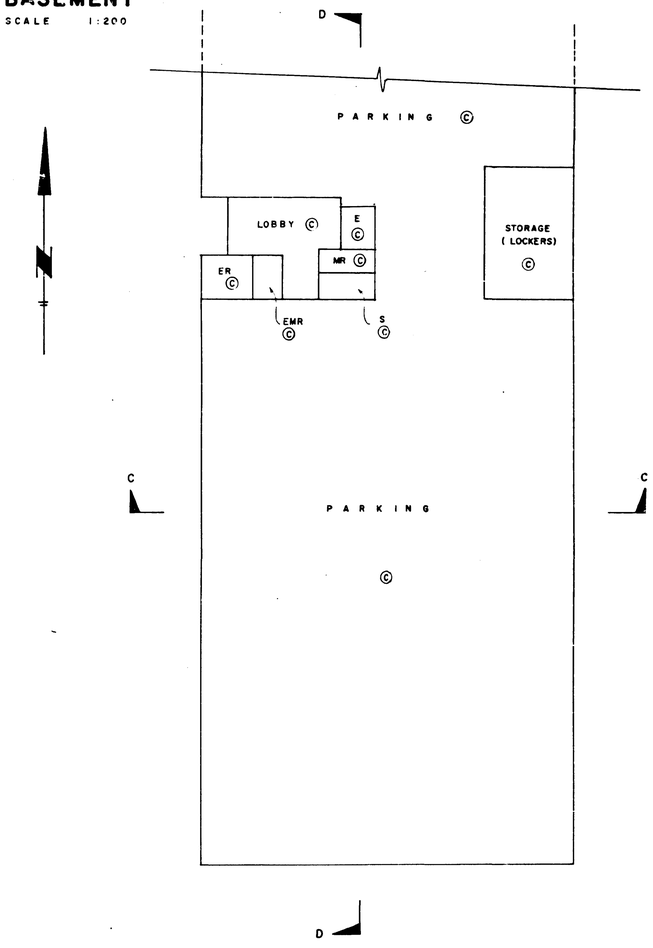

MORGAN STEWART AND COMPANY
Surveyors and Engineers
760 Denman St, Vancouver, B.C.

DATE June 17/86 B.C.L.S

FILE : 3794

D.F.C. 15354

3

STRATA PLAN _____

BUILDING 'B' - (NORTH PART)
BASEMENT

SCALE 1:200

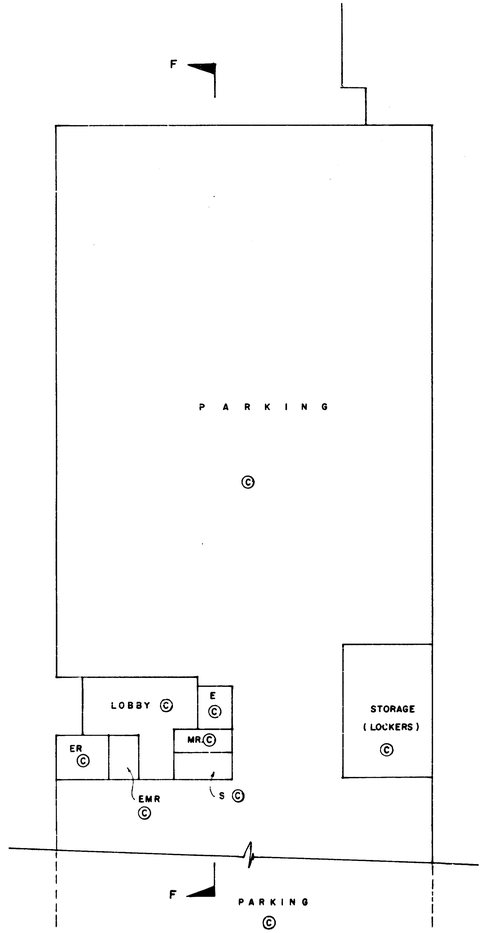

FOR CONTINUATION SEE SHEET No. 9

DATE June 17/86 B.C.L.S.

MORGAN STEWART AND COMPANY
Surveyors and Engineers
760 Denman St, Vancouver, B.C.

FILE : 3794

STRATA PLAN _____

BUILDING 'B' - (SOUTH PART)
GROUND FLOOR

SCALE 1:200

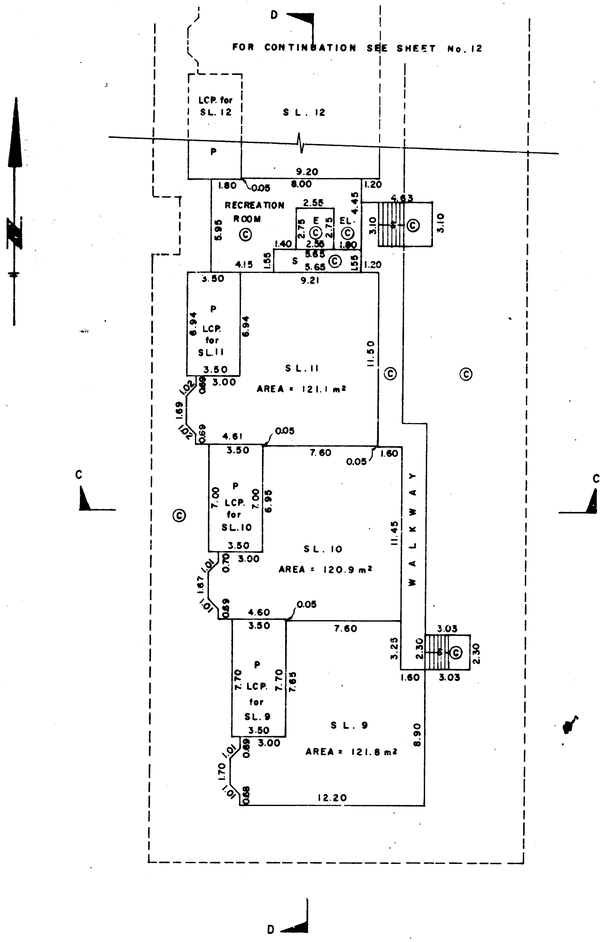

DATE June 17/86 B.C.L.S.

MORGAN STEWART AND COMPANY
Surveyors and Engineers
760 Denman St, Vancouver, B.C.

FILE : 3794

STRATA PLAN _____

BUILDING 'B' - (NORTH PART)
GROUND FLOOR

SCALE 1:200

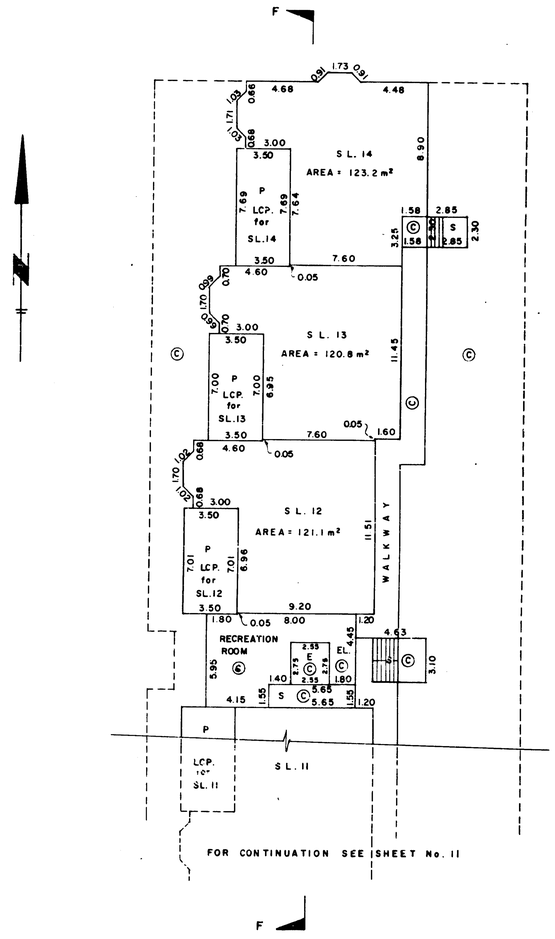

DATE June 17/86 B.C.L.S.

MORGAN STEWART AND COMPANY
Surveyors and Engineers
760 Denman St, Vancouver, B.C.

FILE : 3794

4

STRATA PLAN _____

BUILDING 'B' - (SOUTH PART)
SECOND FLOOR
SCALE 1:200

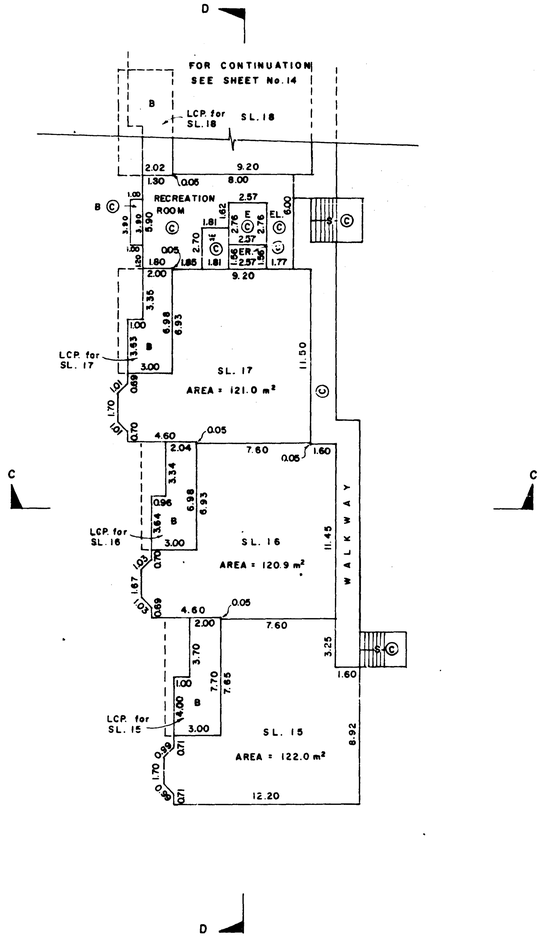

MORGAN STEWART AND COMPANY
Surveyors and Engineers
710 Denman St, Vancouver, B.C.

DATE June 17/86 _____ B.C.L.S

FILE : 3794

STRATA PLAN _____

BUILDING 'B' - (NORTH PART)
SECOND FLOOR
SCALE 1:200

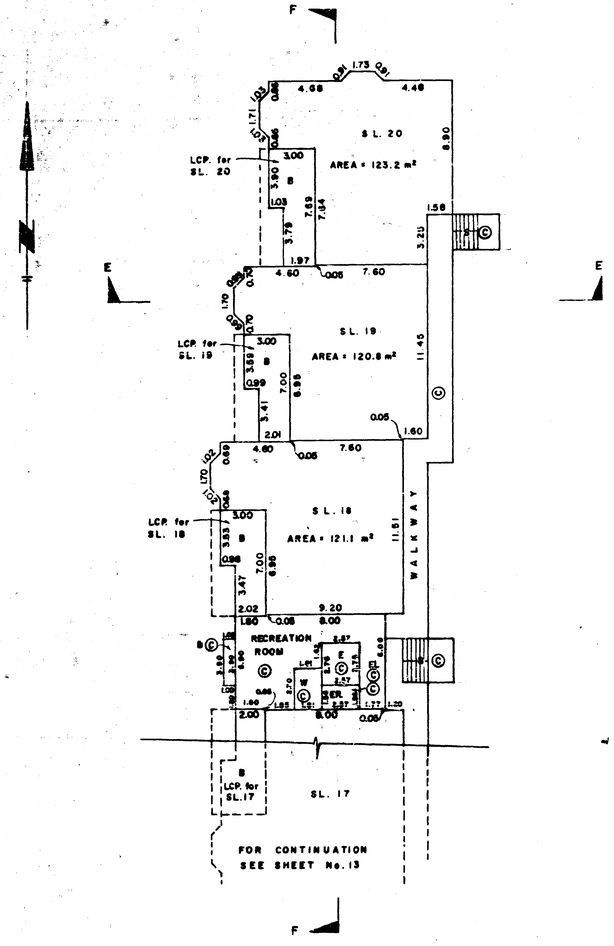

MORGAN STEWART AND COMPANY
Surveyors and Engineers
760 Denman St, Vancouver, B.C.

DATE June 17/86 _____ B.C.L.S

FILE : 3794

STRATA PLAN 2436

BUILDING 'B' - (SOUTH PART)
THIRD FLOOR
SCALE 1:200

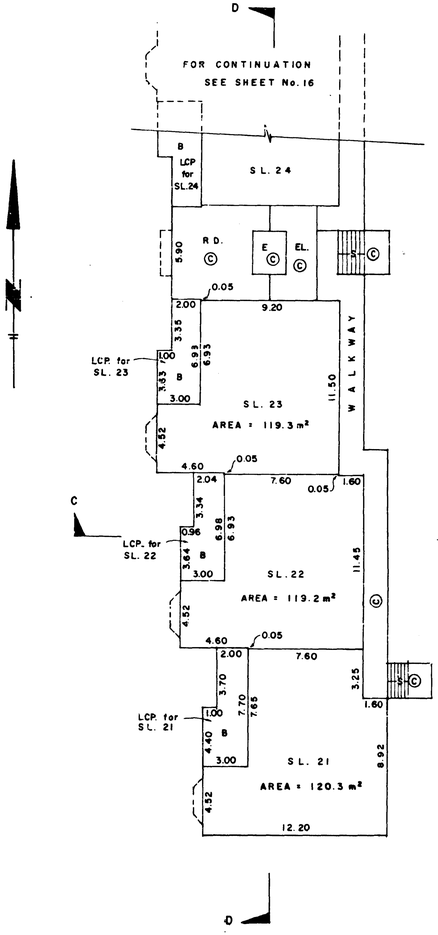

MORGAN STEWART AND COMPANY
Surveyors and Engineers
760 Denman St, Vancouver, B.C.

DATE June 17/86 _____ B.C.L.S

FILE : 3794

5

BUILDING 'B' - (NORTH PART)

STRATA PLAN 2438

THIRD FLOOR

SCALE 1:200

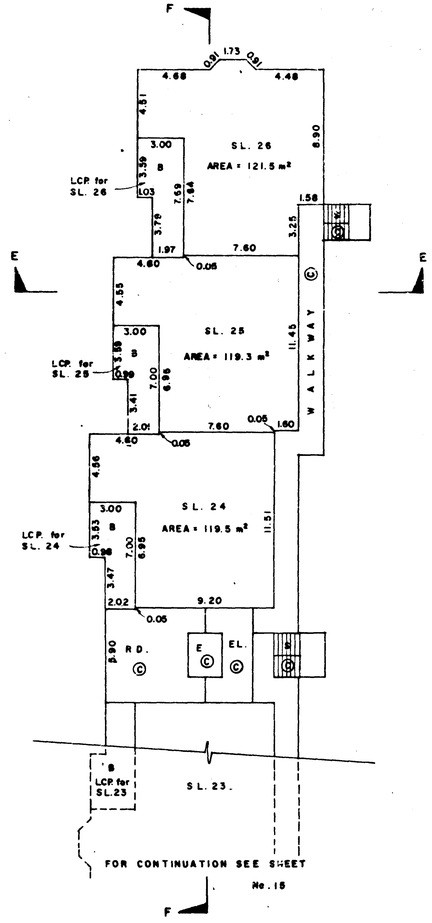

MORGAN STEWART AND COMPANY
Surveyors and Engineers
760 Denman St, Vancouver, B.C.

DATE June 17/86 B.C.L.S

FILE : 3794

BUILDING 'C'

STRATA PLAN 2438

GROUND FLOOR

SCALE 1:200

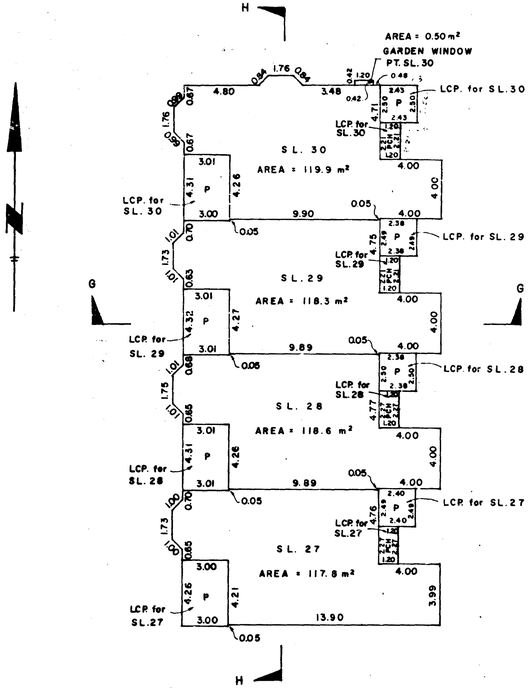

MORGAN STEWART AND COMPANY
Surveyors and Engineers
760 Denman St, Vancouver, B.C.

DATE June 17/86 B.C.L.S

FILE : 3794

BUILDING 'C'

STRATA PLAN 2438

SECOND FLOOR

SCALE 1:200

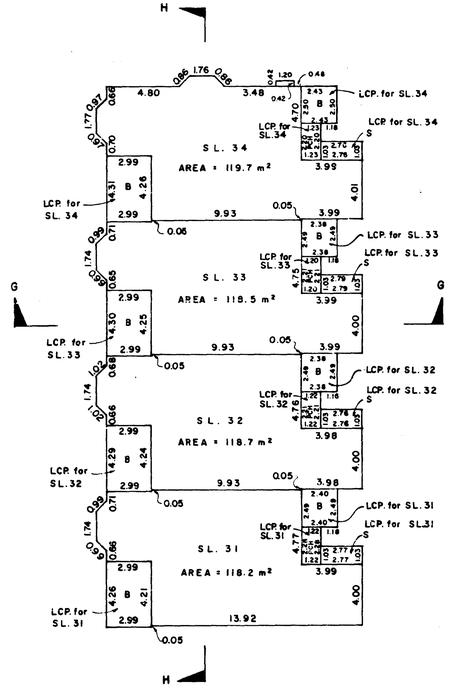

MORGAN STEWART AND COMPANY
Surveyors and Engineers
760 Denman St, Vancouver, B.C.

DATE June 17/86 B.C.L.S

FILE : 3794

6

STRATA PLAN 2438

RECORD OF BY-LAWS AND ORDERS, ETC.

FILING		DOCUMENTS	
NUMBER	DATE	DATE	NATURES & PARTICULARS

DATE JUNE 17/86 B.C.L.S.

MORGAN STEWART AND COMPANY
Surveyors and Engineers
760 Denman St, Vancouver, B.C.

D of C - 15354

STRATA PLAN 2438

DEALINGS EFFECTING THE COMMON PROPERTY.

FILING		DOCUMENTS	
NUMBER	DATE	DATE	NATURES & PARTICULARS
Z34099	28·02·1986	@ 9:43	Mortgage Columbia Trust Company Reg 106T Inter Alia
Z34100	28·02·1986	@ 9:44	Assignment of Rents Columbia Trust Company Reg 106T Inter Alia
Z35253	28·2·1986	@ 13:59	Mortgage C.A Equities Ltd. Inc 293319 as to 1/10th int Harwich Holdings Ltd Inc 24435H as to 1/10th int Rafter Brook Investments Ltd. Inc 287939 as to 4/10ths int Harold Kenny Maddison as to 2/10ths interest Harold Barnard Robertson as to 2/10 ths interest Inter Alia
Z35254	28·2·1986	@ 13:59	Assignment of Rents Z35254 C.A Equities Ltd. Inc 293319 as to 1/10th interest Harwich Holdings Ltd. Inc 24435H as to 1/10th interest Rafter Brook Investments Ltd Inc 287939 as to 4/10th interest Harold Kenny maddison as to 2/10ths interest Harold Barnard Robertson as to 2/10ths interest

DATE JUNE 17/86 B.C.L.S.

MORGAN STEWART AND COMPANY
Surveyors and Engineers
760 Denman St, Vancouver, B.C.

D of C - 15354

7