STRATA PLAN OF PART OF LOT A SECTION 19, TOWNSHIP 2, N.W.D., PLAN NWP88367

FIRST SHEET, SHEET 1 OF 12 SHEETS

STRATA PLAN LMS 1425
PHASE 1

Form C
BH 207707

DEPOSITED AND REGISTERED IN THE LAND TITLE OFFICE AT NEW WESTMINSTER, B.C., THIS 1 DAY OF JUNE, 1994.

ASSISTANT DEPUTY REGISTRAR

REF. NO. BH 207708

SCALE 1: 750

10 0 10 20 30 40

ALL DISTANCES ARE IN METRES

"CITY OF SURREY"

"LACOSTA GREEN"
12160 80TH AVENUE
SURREY, B.C.

INTEGRATED SURVEY AREA NO. 1
CITY OF SURREY

THIS PLAN SHOWS GROUND-LEVEL MEASURED DISTANCES. PRIOR TO COMPUTATION OF U.T.M. CO-ORDINATES MULTIPLY BY COMBINED FACTOR 0.9995369509

LEGEND

GRID BEARINGS ARE DERIVED FROM OLD CONTROL MONUMENTS 5137 AND 5602.

- ● DENOTES STANDARD IRON POST FOUND
- ▲ DENOTES CONTROL MONUMENT FOUND
- O/S DENOTES OFFSET TO PROPERTY LINE
- SL DENOTES STRATA LOT
- m² DENOTES SQUARE METRES
- (C) DENOTES COMMON PROPERTY
- (B) DENOTES BALCONY (ALL BALCONIES ARE COMMON PROPERTY)

THE ADDRESS FOR SERVICE OF DOCUMENTS OF THE STRATA CORPORATION IS:
THE OWNERS, STRATA PLAN LMS 1425
#6-15243 31ST AVENUE
SURREY, B.C.
V3R 8P8

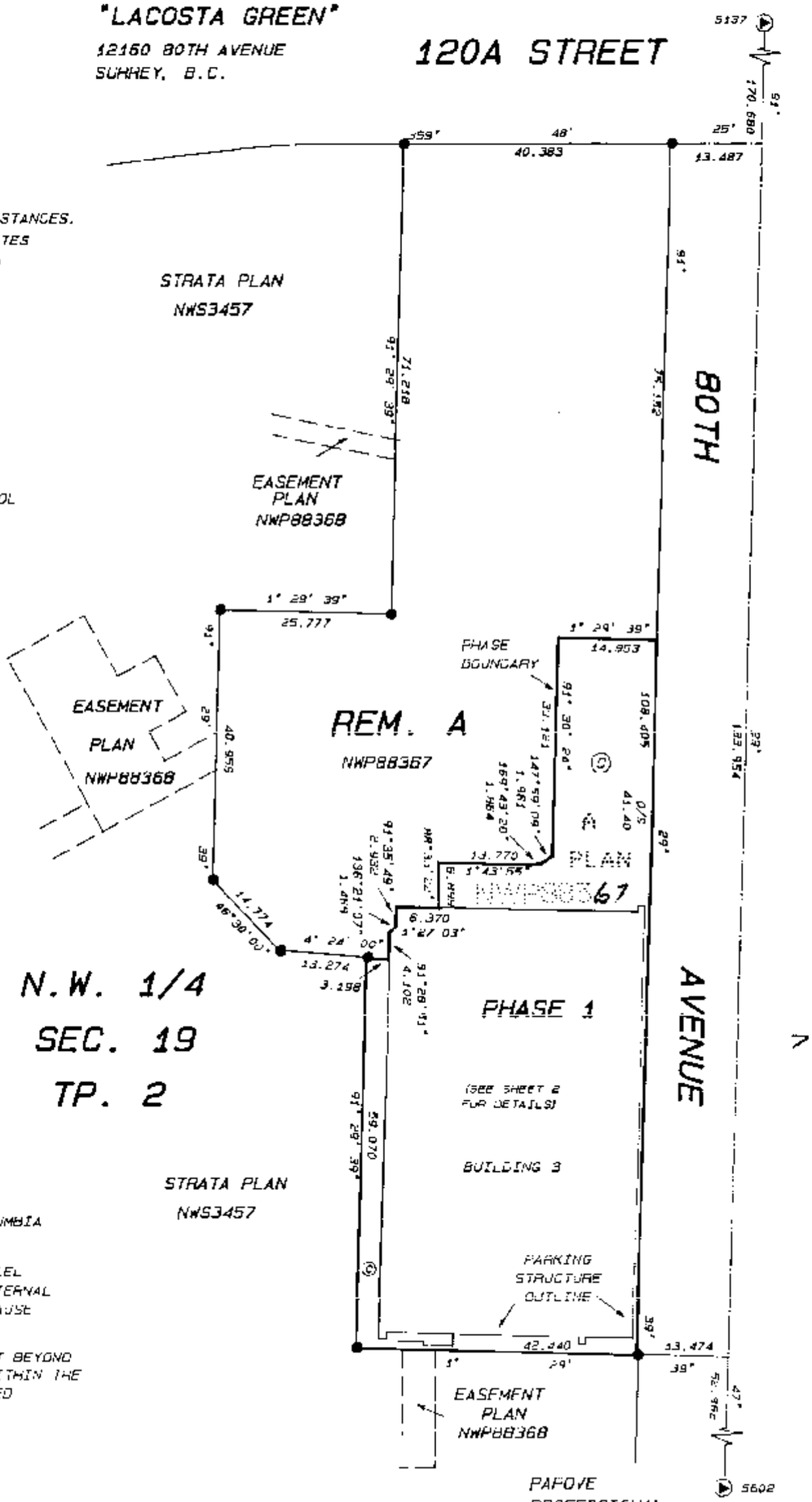

I, W. PAPOVE OF COQUITLAM A BRITISH COLUMBIA LAND SURVEYOR, HEREBY CERTIFY:

1. THAT THE BUILDING ERECTED ON THE PARCEL DESCRIBED ABOVE IS WHOLLY WITHIN THE EXTERNAL BOUNDARIES OF THAT PARCEL SUBJECT TO CLAUSE 2 OF THIS CERTIFICATE.

2. CERTAIN PARTS OF THE BUILDING PROJECT BEYOND SUCH EXTERNAL BOUNDARIES BUT THEY ARE WITHIN THE LIMITS OF THE LANDS CHARGED BY REGISTERED EASEMENT BH 207764

DATED AT COQUITLAM, B.C.
THIS 4TH DAY OF MAY, 1994.

B.C.L.S.

THIS PLAN LIES WITHIN THE GREATER VANCOUVER REGIONAL DISTRICT

PAPOVE PROFESSIONAL LAND SURVEYING INC.
#202-1070 HILLSWAY AVENUE
COQUITLAM, B.C. V3J 1S7
TEL. 936-3737 FAX. 936-6509
FILE NO. 3303P1

FILED LMLMS1425 Y43507 2007-07-03-12.47.45.487196

FILED LMLMS1425 Y43507 2007-07-03-12.47.45.487196

BUILDING LOCATION

FIRST SHEET, SHEET 2 OF 12 SHEETS

STRATA PLAN LMS 1425

PHASE 1

SCALE 1: 200

5 0 5 10

ALL DISTANCES ARE IN METRES

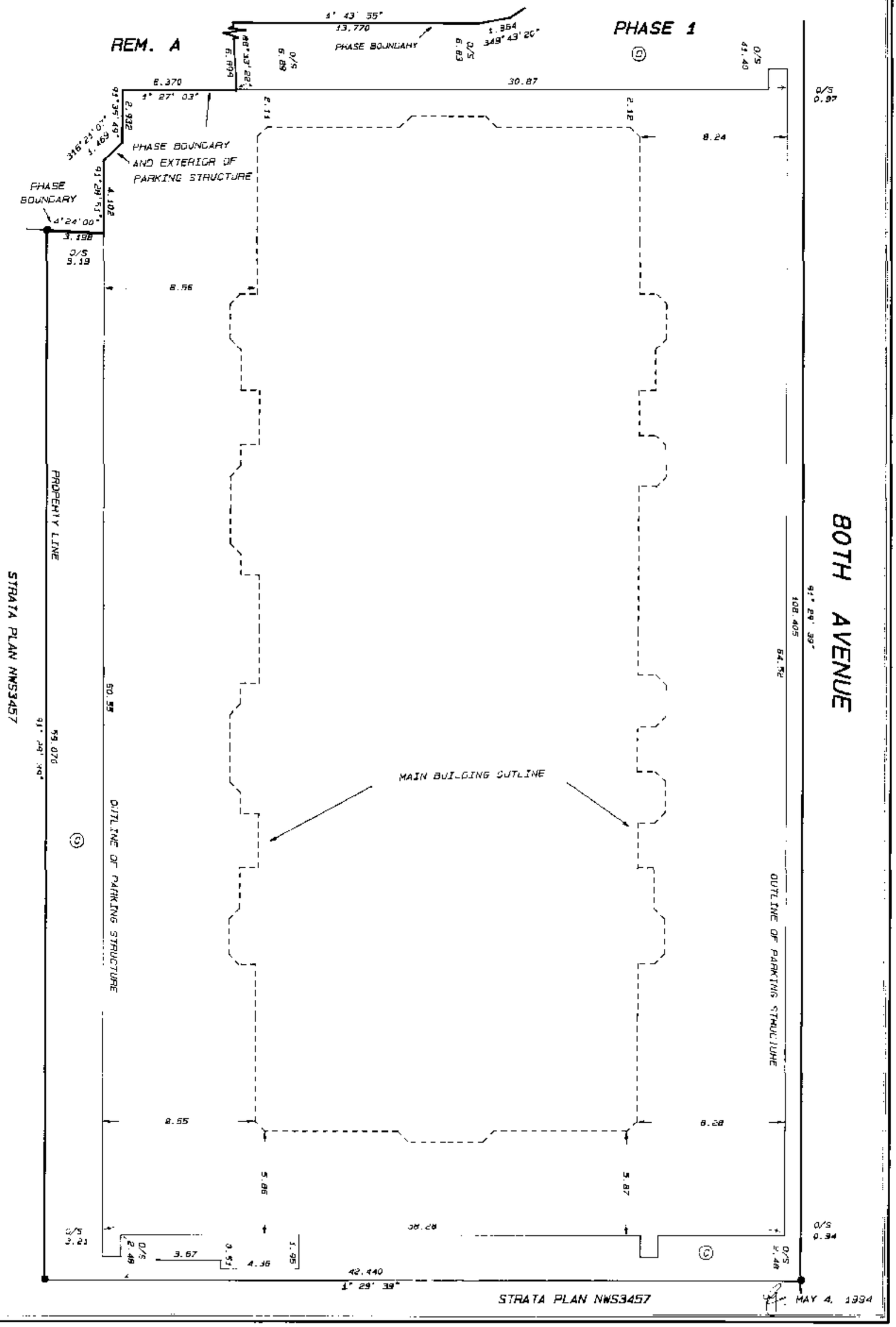

CONDOMINIUM ACT

STRATA PLAN LMS 1425
PHASE 1

STRATA LOT	SHEET NUMBER	FORM 1 SCHEDULE OF UNIT ENTITLEMENT UNIT ENTITLEMENT	FORM 2 SCHEDULE OF INTEREST UPON DESTRUCTION INTEREST UPON DESTRUCTION
1	5 AND 10	741	109
2	5 AND 10	858	111
3	5 AND 10	568	89
4	5 AND 10	576	89
5	5 AND 10	575	89
6	5 AND 10	809	111
7	5 AND 10	741	110
8	6 AND 10	741	110
9	6 AND 10	970	108
10	6 AND 10	700	97
11	6 AND 10	699	97
12	6 AND 10	701	97
13	6 AND 10	871	113
14	6 AND 10	741	110
15	7 AND 10	743	110
16	7 AND 10	905	116
17	7 AND 10	632	99
18	7 AND 10	542	99
19	7 AND 10	578	89
20	7 AND 10	637	95
21	7 AND 10	909	116
22	7 AND 10	743	111
23	7 AND 10	742	111
24	7 AND 10	871	114
25	7 AND 10	732	98
26	7 AND 10	732	98
27	7 AND 10	730	98
28	7 AND 10	731	98
29	7 AND 10	872	114
30	7 AND 10	743	111
31	8 AND 10	935	126
32	8 AND 10	935	121
33	8 AND 10	693	96
34	8 AND 10	510	93
35	8 AND 10	577	89
36	8 AND 10	640	96
37	8 AND 10	935	121
38	8 AND 10	934	128
39	8 AND 10	878	118
40	8 AND 10	730	99
41	8 AND 10	701	98
42	8 AND 10	704	99
43	8 AND 10	703	99
44	8 AND 10	873	118
45	9 AND 10	915	130
46	9 AND 10	693	99
47	9 AND 10	505	95
48	9 AND 10	576	94
49	9 AND 10	537	93
50	9 AND 10	917	131
51	9 AND 10	732	104
52	9 AND 10	731	102
53	9 AND 10	703	102
54	9 AND 10	702	104
AGGREGATE PHASE 1		39637	5655

MAY 4, 1994

FILED LMLMS1425 Y43507 2007-07-03-12.47.45.487196

SECOND SHEET, SHEET 4 OF 12 SHEETS

CONDOMINIUM ACT

STRATA PLAN LMS 1425
PHASE 1

APPROVED AS TO PHASE 1 OF A 3 PHASE STRATA PLAN UNDER THE CONDOMINIUM ACT.
THIS 25th DAY OF May, 1994

APPROVING OFFICER FOR THE CITY OF SURREY

LA COSTA PROJECTS LTD.
(INC. NO. 351872)

AUTHORIZED SIGNATORY

AUTHORIZED SIGNATORY

WITNESS

Michael Kandler
100-[illegible] 104 AVE
ADDRESS OF WITNESS

Surrey BC

OCCUPATION OF WITNESS

STATUTORY DECLARATION

I, THE UNDERSIGNED DO SOLEMNLY DECLARE THAT
(1) I, THE UNDERSIGNED AM THE DULY AUTHORIZED AGENT OF THE OWNER-DEVELOPER
(2) THE STRATA PLAN IS ENTIRELY FOR RESIDENTIAL USE.

I MAKE THIS SOLEMN DECLARATION CONSCIENTIOUSLY BELIEVING IT TO BE TRUE AND KNOWING THAT IT IS OF THE SAME FORCE AND EFFECT AS IF MADE UNDER OATH.

DECLARED BEFORE ME AT Surrey
IN THE PROVINCE OF BRITISH COLUMBIA
THIS 11 DAY OF May, 1994.

A COMMISSIONER FOR TAKING AFFIDAVITS WITHIN THE PROVINCE OF BRITISH COLUMBIA

NATIONAL TRUST COMPANY
(REG. NO. 141T)

Connie Gaudreau
AUTHORIZED SIGNATORY Connie Gaudreau

Frances Rosen
AUTHORIZED SIGNATORY

V. Bot VAN BOT
WITNESS

1177 W. HASTINGS ST
VANCOUVER, B.C
ADDRESS OF WITNESS

MANAGER, CLIENT SERVICES
OCCUPATION OF WITNESS

THE TORONTO DOMINION BANK

AUTHORIZED SIGNATORY
BRUCE M. SHIRREFF
VICE PRESIDENT
MORTGAGES
AUTHORIZED SIGNATORY

Donna De'Frias
WITNESS DONNA DE' FRIAS
Mortgage Dept, T.D. Tower 22ND FL
55 KING ST W
TORONTO, ONTARIO M5K 1A2
ADDRESS OF WITNESS

Mortgage Servicing Officer
OCCUPATION OF WITNESS

ACCEPTED AS TO FORMS 1 AND 2
THIS 30 DAY OF May, 1994.

for SUPERINTENDENT OF REAL ESTATE

MAY 4, 1994

FILED LMLMS1425 Y43507 2007-07-03-12.47.45.487196

BUILDING 3
PARKING LEVEL
FLOOR PLANS

STRATA PLAN LMS 1425
PHASE 1

SCALE 1:200

5 0 5 10

ALL DISTANCES ARE IN METRES

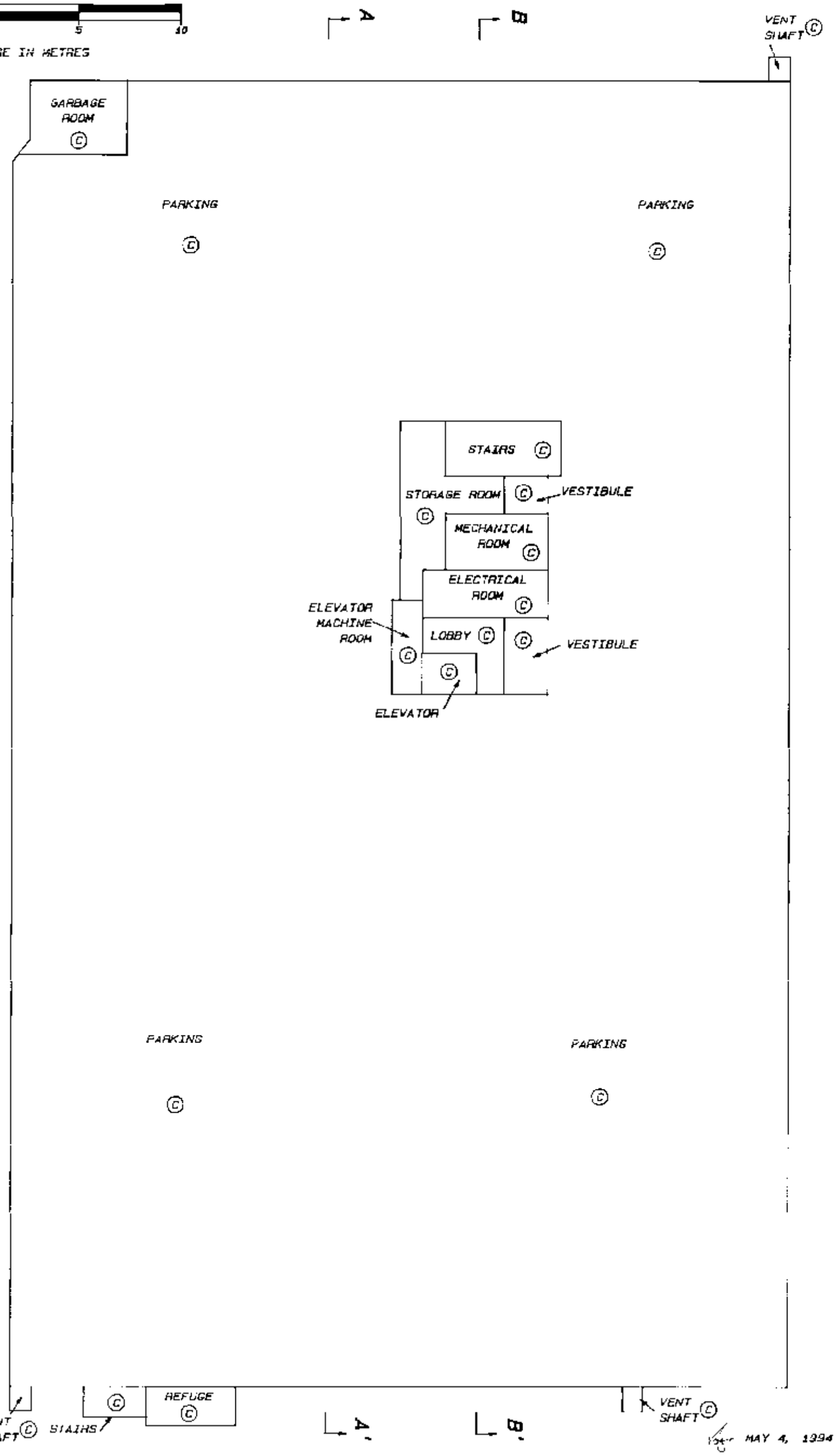

MAY 4, 1994

FILED LMLMS1425 Y43507 2007-07-03-12.47.45.487196

BUILDING 3
1ST FLOOR

FLOOR PLANS

CORRECTED THIS 21 DAY OF JUNE, 1994
SEE BK 233430 AND AMENDING SHEET 6

DEPUTY REGISTRAR

STRATA PLAN LMS 1425
PHASE 1

SCALE 1: 200

5 0 5 10

ALL DISTANCES ARE IN METRES

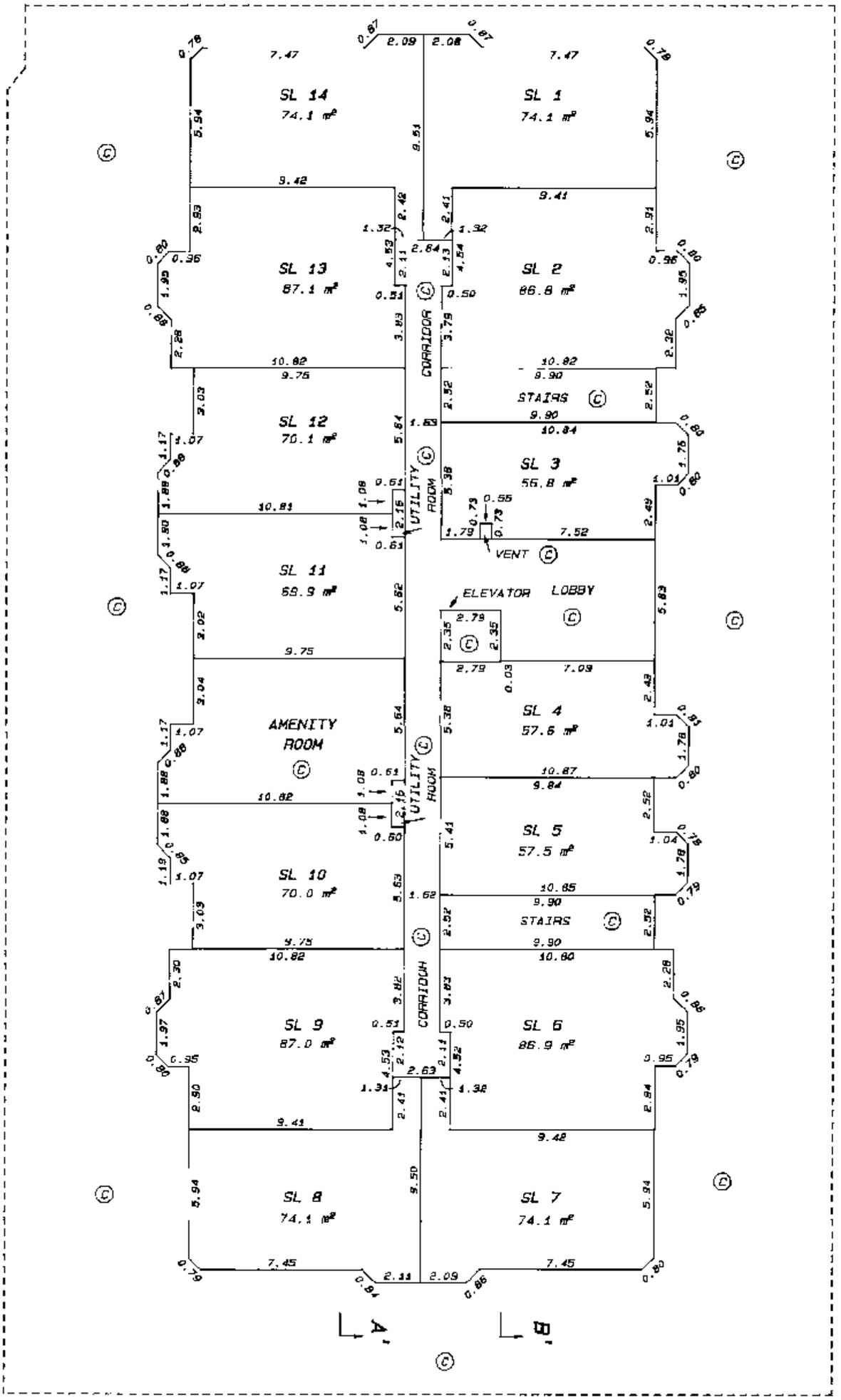

MAY 4, 1994

FILED LMLMS1425 Y43507 2007-07-03-12.47.45.487196

BUILDING 3
1ST FLOOR
FLOOR PLANS

AMENDING SHEET 6 OF 12 SHEETS

STRATA PLAN LMS 1425
PHASE 1

SCALE 1: 200

5 0 5 10

ALL DISTANCES ARE IN METRES

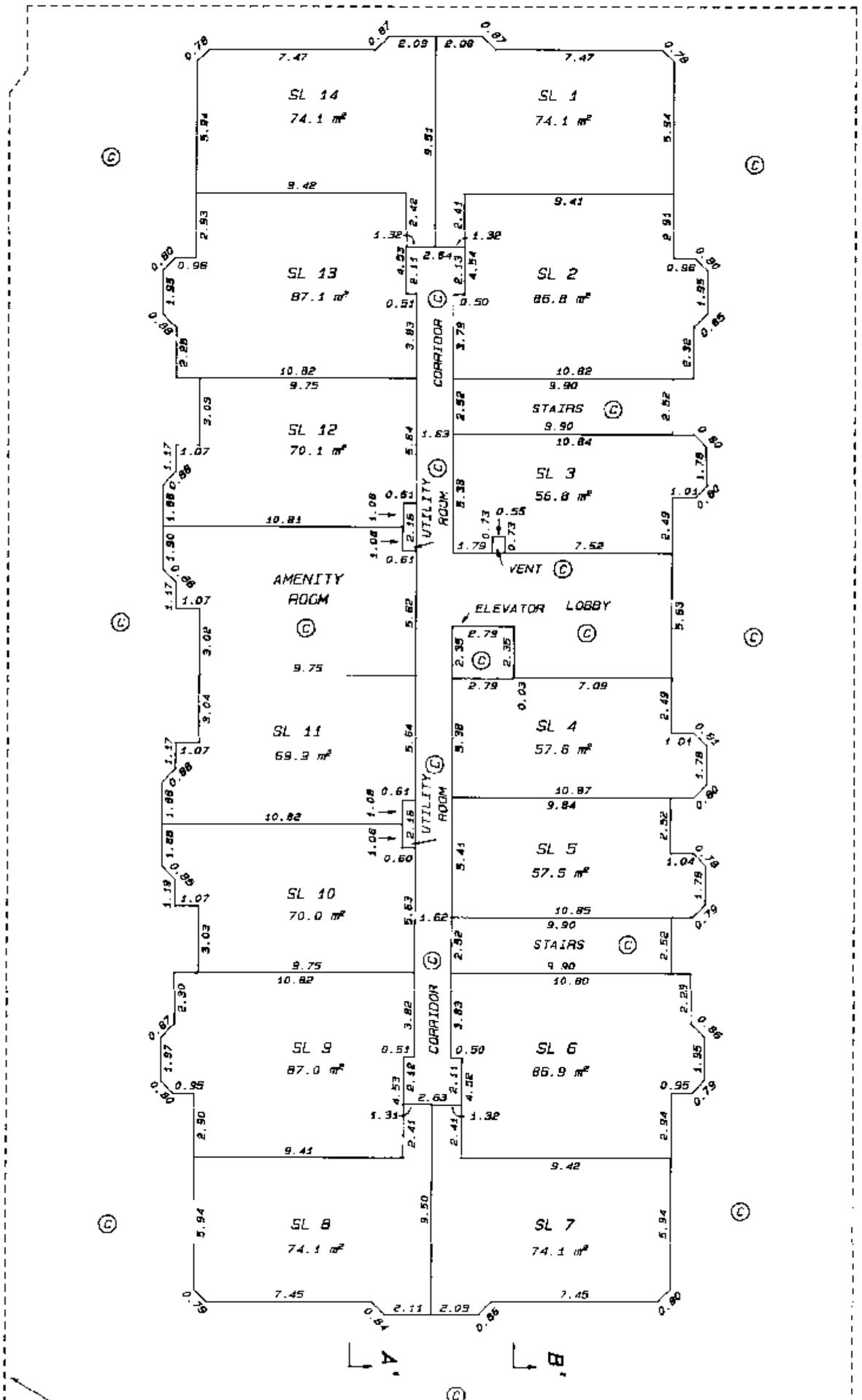

JUNE 21, 1994

FILED LMLMS1425 Y43507 2007-07-03-12.47.45.487196

BUILDING 3
2ND FLOOR

FLOOR PLANS

STRATA PLAN LMS 1425
PHASE 1

SCALE 1: 200

5 0 5 10

ALL DISTANCES ARE IN METRES

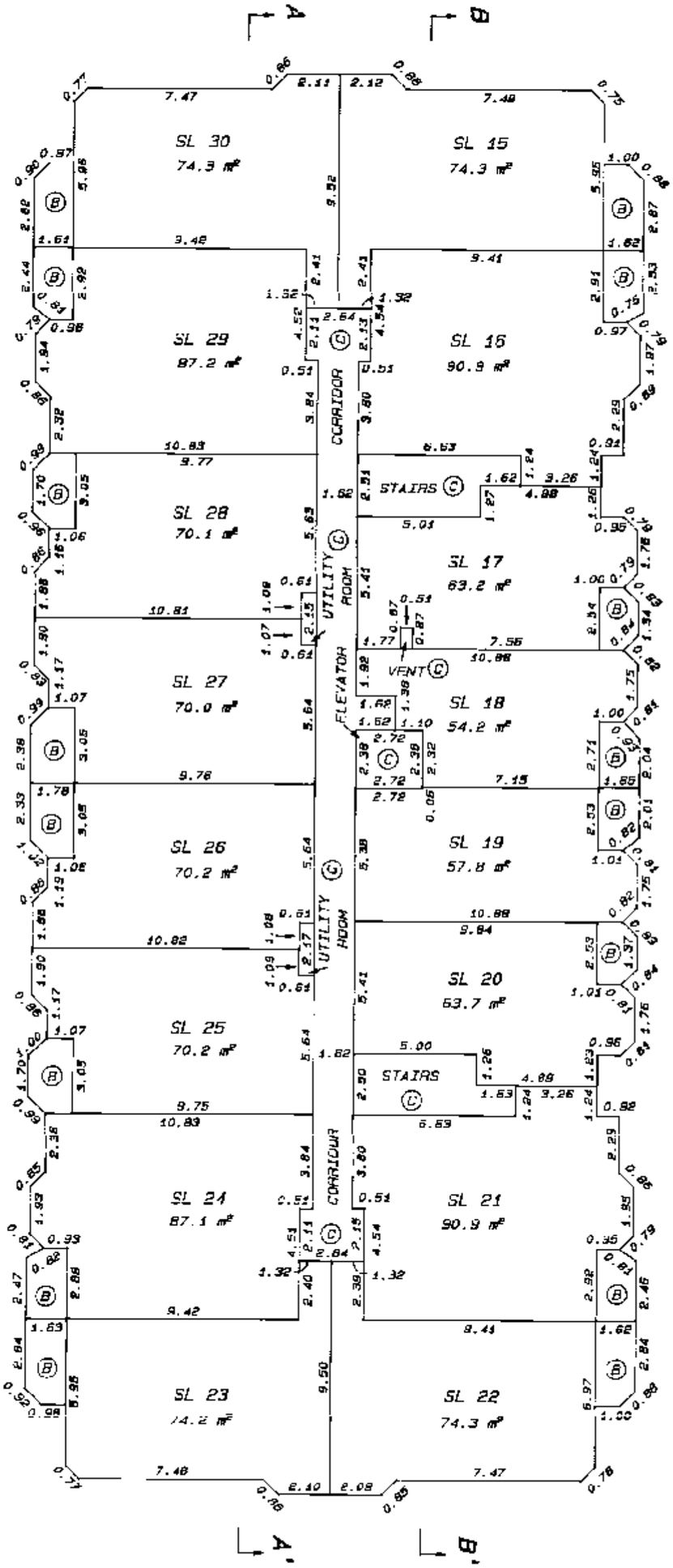

MAY 4, 1994

FILED LMLMS1425 Y43507 2007-07-03-12.47.45.487196

BUILDING 3
3RD FLOOR

FLOOR PLANS

STRATA PLAN LMS 1425
PHASE 1

SCALE 1:200

5 0 5 10

ALL DISTANCES ARE IN METRES

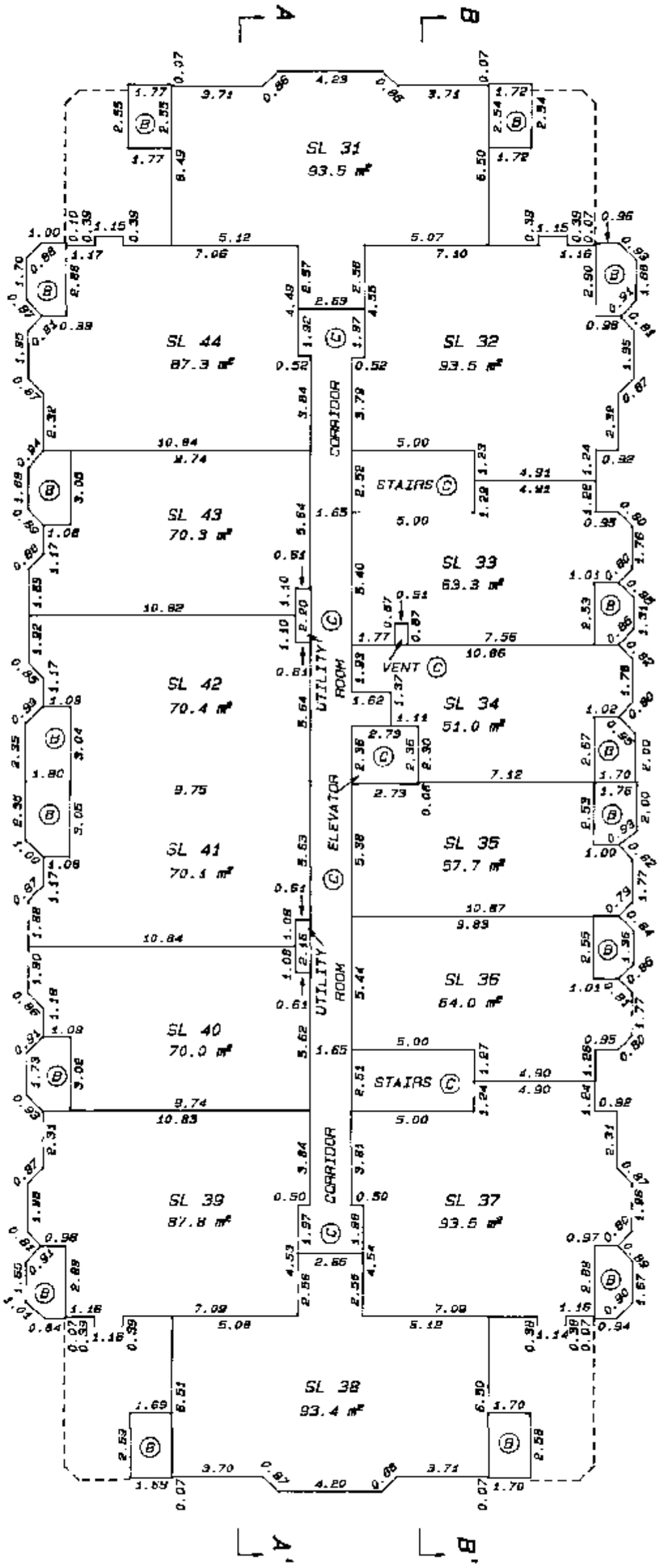

MAY 4, 1994

FILED LMLMS1425 Y43507 2007-07-03-12.47.45.487196

BUILDING 3
4TH FLOOR

FLOOR PLANS

STRATA PLAN LMS 1425
PHASE 1

SCALE 1:200

5 0 5 10

ALL DISTANCES ARE IN METRES

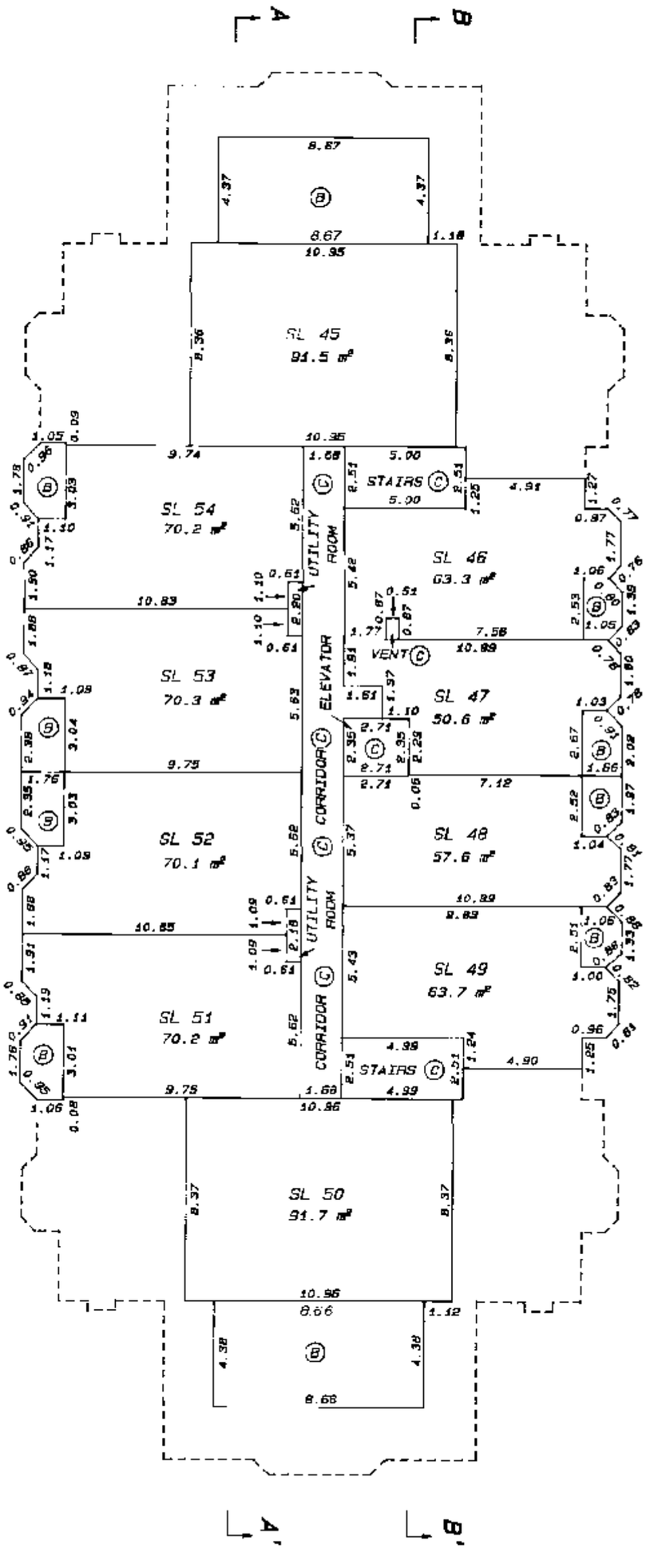

MAY 4, 1994

FILED LMLMS1425 Y43507 2007-07-03-12.47.45.487196

SHEET 10 OF 12 SHEETS

STRATA PLAN LMS 1425
PHASE 1

MAY 4, 1994

SECTION A – A'

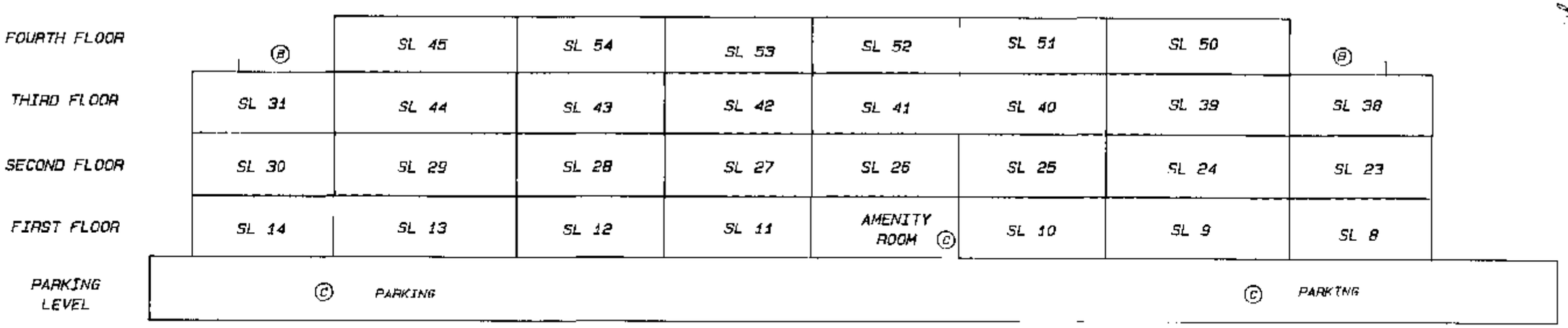

SECTION B – B'

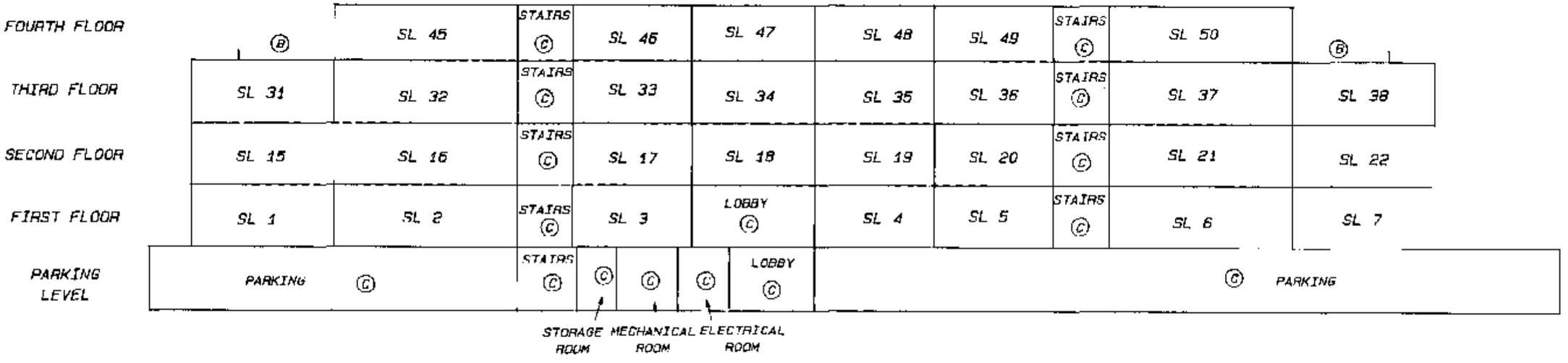

SECTION

SCALE 1:200

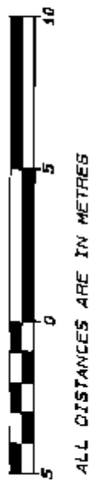

ALL DISTANCES ARE IN METRES

CORRECTED THIS 21 DAY OF JUNE, 1994
SEE BH173430 AND AMENDING SHEET 10

DEPUTY REGISTRAR

FILED LNLMS1425 Y43507 2007-07-03-12.47.45.487196

AMENDING SHEET 10 OF 12 SHEETS

STRATA PLAN LMS 1425

PHASE 1

SECTION A - A'

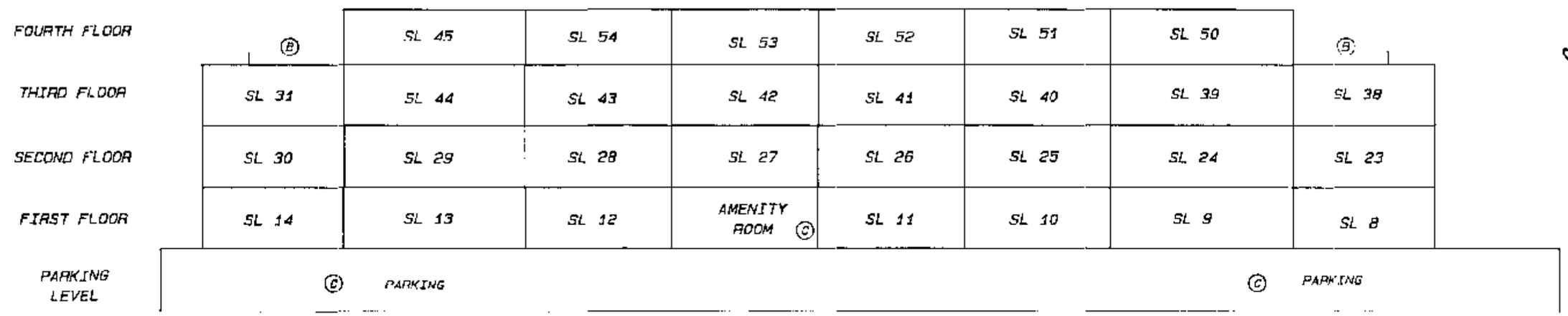

SECTION B - B'

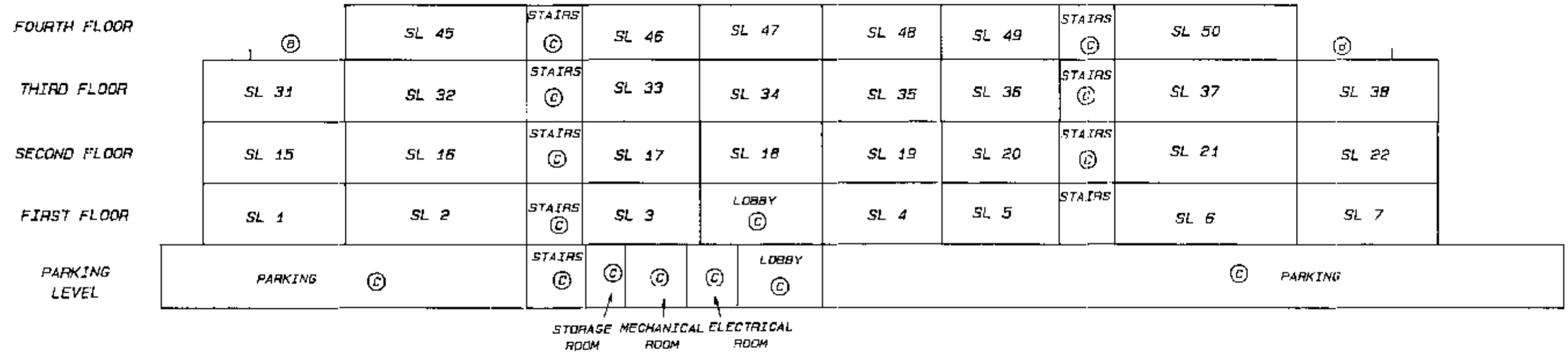

SECTION

SCALE 1:200

10 5 0 5

ALL DISTANCES ARE IN METRES

JUNE 21, 1994

Property Sheet Closed 3/1/96
Search ALTO62 or BC OnLine for Current Information. BC Reg. 76/95
LINDA J. O'SHEA, Registrar
New Westminster Land Title District

STRATA PLAN LMS 1425

DEALINGS AFFECTING THE COMMON PROPERTY

REGISTRATION		DOCUMENT	
NUMBER	DATE	DATE	NATURE AND PARTICULARS
THIS TITLE MAY BE AFFECTED BY AN EXCESS CAPACITY LATECOMER AGREEMENT SEE 2238638			EXPIRES 10.12.1996
HERETO IS ANNEXED EASEMENT AE42247 OVER PART 356.6 M2 AND 105.0 M2 PLAN NWP88368 LOT B PLAN NWP88367			
HERETO IS ANNEXED EASEMENT AE42255 OVER (PART 105.2 AND 3227.0 M2 PLAN NWP88368) LOT B PLAN NWP88367			
THIS TITLE MAY BE AFFECTED BY A PERMIT UNDER PART 29 OF THE MUNICIPAL ACT. SEE BG294371			EXPIRES N/A
90282C			UNDERSURFACE RIGHTS SEE 165816 AS TO PART FORMERLY E 1/2 LOT 1 PLAN 586 INTER ALIA
AC225175	15.09.1989		COVENANT DISTRICT OF SURREY L.T.A. SECTION 215 INTER ALIA
AD19925	22.01.1990		COVENANT DISTRICT OF SURREY L.T.A. SECTION 215 INTER ALIA
AE42248	20.03.1991		COVENANT DISTRICT OF SURREY L.T.A. SECTION 215 SEE AE42247 INTER ALIA
AE42256	20.03.1991		COVENANT DISTRICT OF SURREY L.T.A. SECTION 215 SEE AE42255 INTER ALIA
HERETO IS ANNEXED EASEMENT BH207764 OVER (PLAN LMP17078) LOT A EXCEPT PHASE ONE STRATA PLAN LMS1425, PLAN NWP88367 merged Phase 3 LMS1425			
HERETO IS ANNEXED EASEMENT BH270861 OVER (PLAN LMP17993) LOT A PLAN NWP88367 EXCEPT PHASE 1 & 2 LMS1425 merged Phase 3 LMS1425			

FILED LMLMS1425 Y43507 2007-07-03-12.47.45.487196

STRATA PLAN LMS 1425

RECORD OF BY-LAWS AND ORDERS, ETC.

FILING		DOCUMENT	
NUMBER	DATE	DATE	NATURE AND PARTICULARS
BH207762	01.06.1994		FORM 8 - NOTIFICATION OF CHANGE OF BYLAWS
BJ286715	25.9.95		NOTIFICATION OF CHANGE OF BYLAWS
BL390352	Nov. 19/97		Change of Bylaws

MAY 4, 1994

FILED LMLMS1425 Y43507 2007-07-03-12.47.45.487196

STRATA PLAN OF PART OF LOT A SECTION 19, TOWNSHIP 2, N.W.D., PLAN NWP88367

FIRST SHEET, SHEET 1 OF 10 SHEETS

STRATA PLAN LMS1425
PHASE 2

DEPOSITED AND REGISTERED IN THE LAND TITLE OFFICE AT NEW WESTMINSTER, B.C., THIS 21 DAY OF JULY, 1994.

ASSISTANT DISTRICT REGISTRAR

REF. NO. BH272818

SCALE 1: 750

10 0 10 20 30 40

ALL DISTANCES ARE IN METRES

"CITY OF SURREY"

"LACOSTA GREEN"
12130 80TH AVENUE
SURREY, B.C.

120A STREET

INTEGRATED SURVEY AREA NO. 1
CITY OF SURREY

THIS PLAN SHOWS GROUND-LEVEL MEASURED DISTANCES. PRIOR TO COMPUTATION OF U.T.M. CO-ORDINATES MULTIPLY BY COMBINED FACTOR 0.9995969509

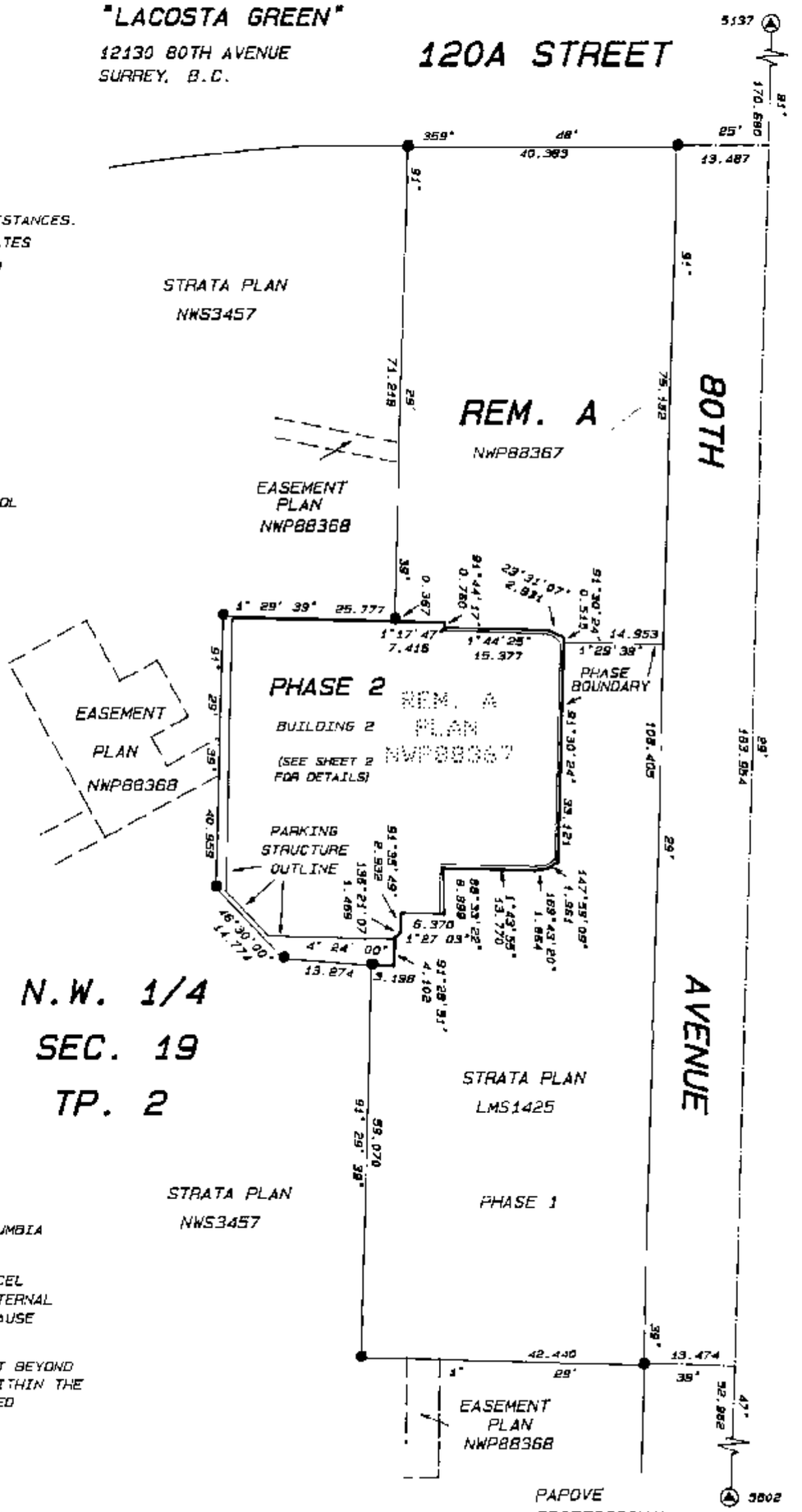

LEGEND

GRID BEARINGS ARE DERIVED FROM OLD CONTROL MONUMENTS 5137 AND 5602.

- ● DENOTES STANDARD IRON POST FOUND
- (▲) DENOTES CONTROL MONUMENT FOUND
- O/S DENOTES OFFSET TO PROPERTY LINE
- S.L. DENOTES STRATA LOT
- m² DENOTES SQUARE METRES
- (C) DENOTES COMMON PROPERTY
- (B) DENOTES BALCONY (ALL BALCONIES ARE COMMON PROPERTY)

THE ADDRESS FOR SERVICE OF DOCUMENTS OF THE STRATA CORPORATION IS:
THE OWNERS, STRATA PLAN LMS1425
#6-15243 91ST AVENUE
SURREY, B.C.
V3R 8P8

N.W. 1/4
SEC. 19
TP. 2

I, W. PAPOVE OF COQUITLAM A BRITISH COLUMBIA LAND SURVEYOR, HEREBY CERTIFY;

1. THAT THE BUILDING ERECTED ON THE PARCEL DESCRIBED ABOVE IS WHOLLY WITHIN THE EXTERNAL BOUNDARIES OF THAT PARCEL SUBJECT TO CLAUSE 2 OF THIS CERTIFICATE.

2. CERTAIN PARTS OF THE BUILDING PROJECT BEYOND SUCH EXTERNAL BOUNDARIES BUT THEY ARE WITHIN THE LIMITS OF THE LANDS CHARGED BY REGISTERED EASEMENT BH272661

DATED AT COQUITLAM, B.C.
THIS 14TH DAY OF JUNE, 1994.

B.C.L.S.

THIS PLAN LIES WITHIN THE GREATER VANCOUVER REGIONAL DISTRICT

PAPOVE
PROFESSIONAL
LAND SURVEYING INC.
#202-1070 RIDGEWAY AVENUE
COQUITLAM, B.C. V3J 1S7
TEL. 936-3737 FAX. 936-6509
FILE NO. 3324P2

FILED LMLMS1425 Y43507 2007-07-03-12.47.45.487196

FILED LMLMS1425 Y43507 2007-07-03-12.47.45.487196

FIRST SHEET, SHEET 2 OF 10 SHEETS

BUILDING 2
BUILDING LOCATION

STRATA PLAN LMS1425
PHASE 2

SCALE 1:250

5 0 5 10 15

ALL DISTANCES ARE IN METRES

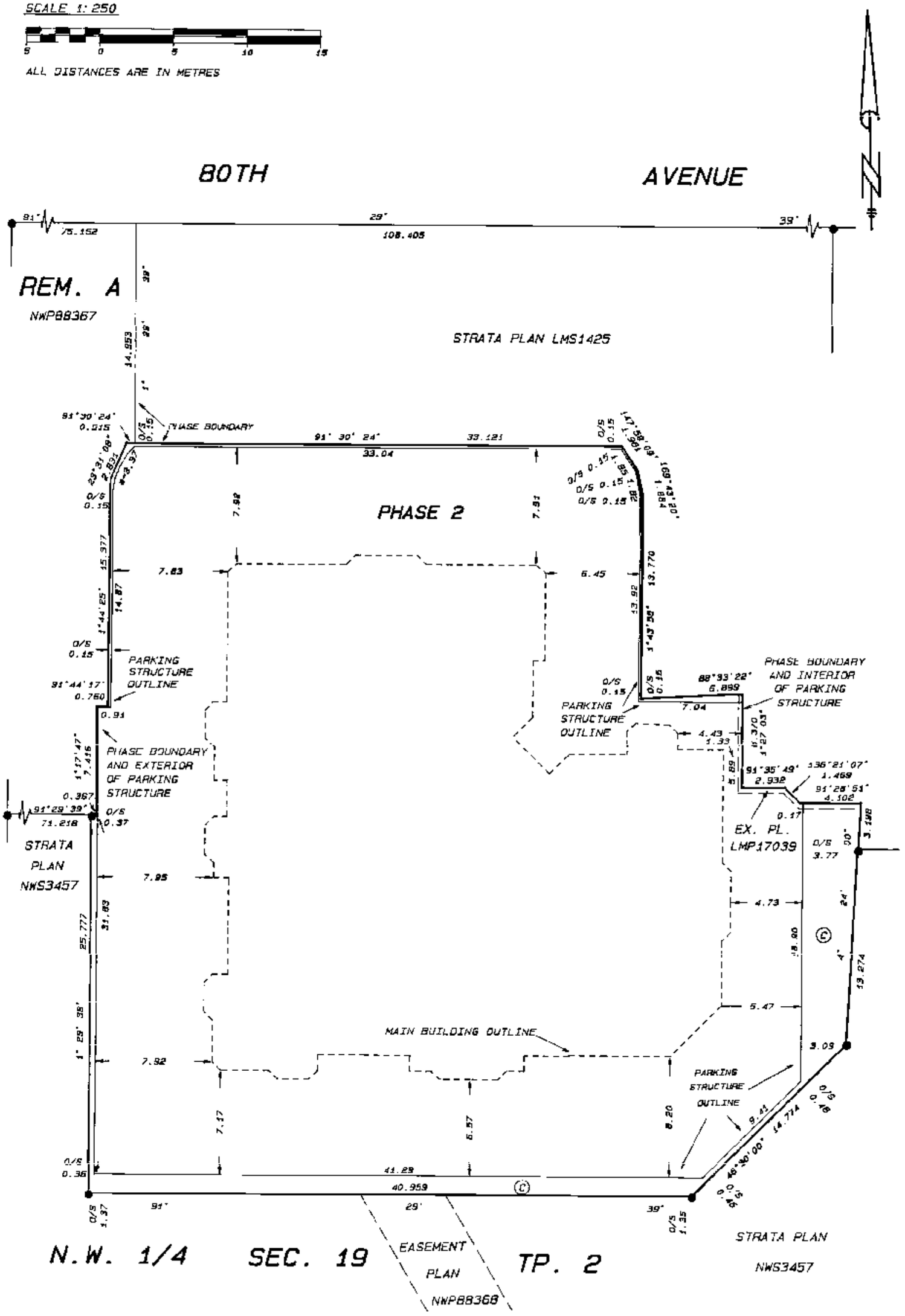

JUNE 14, 1994

CONDOMINIUM ACT

STRATA PLAN LMS1425
PHASE 2

STRATA LOT	SHEET NUMBER	FORM 1	FORM 2
		SCHEDULE OF UNIT ENTITLEMENT	SCHEDULE OF INTEREST UPON DESTRUCTION
		UNIT ENTITLEMENT	INTEREST UPON DESTRUCTION
55	6 AND 10	1008	129
56	6 AND 10	767	99
57	6 AND 10	865	116
58	6 AND 10	743	110
59	6 AND 10	750	110
60	6 AND 10	635	89
61	6 AND 10	638	89
62	6 AND 10	769	115
63	6 AND 10	786	113
64	6 AND 10	747	100
65	7 AND 10	1012	130
66	7 AND 10	829	103
67	7 AND 10	903	117
68	7 AND 10	740	111
69	7 AND 10	739	111
70	7 AND 10	639	93
71	7 AND 10	574	85
72	7 AND 10	638	93
73	7 AND 10	772	116
74	7 AND 10	819	116
75	7 AND 10	760	101
76	7 AND 10	748	101
77	8 AND 10	1015	131
78	8 AND 10	825	104
79	8 AND 10	933	115
80	7 AND 10	934	128
81	8 AND 10	634	94
82	8 AND 10	579	85
83	8 AND 10	641	94
84	8 AND 10	771	117
85	8 AND 10	838	114
86	8 AND 10	750	102
87	8 AND 10	755	102
88	9 AND 10	1018	132
89	9 AND 10	828	105
90	9 AND 10	947	122
91	9 AND 10	713	101
92	9 AND 10	581	86
93	9 AND 10	542	96
94	9 AND 10	863	129
95	9 AND 10	758	105
96	9 AND 10	749	105
AGGREGATE PHASE 2		32665	4514
AGGREGATE PHASE 1 AND 2		72302	10179

JUNE 14, 1994

FILED LMLMS1425 Y43507 2007-07-03-12.47.45.487196

CONDOMINIUM ACT

STRATA PLAN LMS1425
PHASE 2

APPROVED AS TO PHASE 2 OF A 3 PHASE
STRATA PLAN UNDER THE CONDOMINIUM ACT.
THIS 6th DAY OF July , 1994

APPROVING OFFICER FOR
THE ~~DISTRICT~~ CITY OF SURREY

LA COSTA PROJECTS LTD.
(INC. NO. ~~351878~~)

AUTHORIZED SIGNATORY
Hilar Belling

AUTHORIZED SIGNATORY

WITNESS
Michael Kendler
200-13889-104 Ave
ADDRESS OF WITNESS
Surrey, BC
Lawyer
OCCUPATION OF WITNESS

STATUTORY DECLARATION

I. THE UNDERSIGNED DO SOLEMNLY DECLARE THAT
(1) I. THE UNDERSIGNED AM THE DULY AUTHORIZED AGENT OF THE OWNER-DEVELOPER
(2) THE STRATA PLAN IS ENTIRELY FOR RESIDENTIAL USE.

I MAKE THIS SOLEMN DECLARATION CONSCIENTIOUSLY BELIEVING IT TO BE TRUE AND KNOWING THAT IT IS OF THE SAME FORCE AND EFFECT AS IF MADE UNDER OATH.

DECLARED BEFORE ME AT Surrey
IN THE PROVINCE OF BRITISH COLUMBIA
THIS 20 DAY OF July , 1994.

A COMMISSIONER FOR TAKING AFFIDAVITS
WITHIN THE PROVINCE OF BRITISH COLUMBIA

NATIONAL TRUST COMPANY
(REG. NO. 141T)

AUTHORIZED SIGNATORY Connie Gauthreau

AUTHORIZED SIGNATORY FRANCES IPSEN

WITNESS VAN BOT
1177 W. HASTINGS ST
VANCOUVER, BC
ADDRESS OF WITNESS

MANAGER, CLIENT SERVICES
OCCUPATION OF WITNESS

THE TORONTO-DOMINION BANK

AUTHORIZED SIGNATORY
BRUCE M. SHIRREFF
VICE

AUTHORIZED SIGNATORY

WITNESS Lisa O'Brien
TD BANK
55 KING ST. W. - 22ND FLOOR
TD TOWER, TORONTO, ONT.
ADDRESS OF WITNESS

MORTGAGE SERVICING OFFICER
OCCUPATION OF WITNESS

ACCEPTED AS TO FORMS 1 AND 2
THIS 14 DAY OF July , 1994.

for: SUPERINTENDENT OF REAL ESTATE

FILED LMLMS1425 Y43507 2007-07-03-12.47.45.487196

BUILDING 2
PARKING LEVEL

FLOOR PLAN

STRATA PLAN LMS1425
PHASE 2

SCALE 1: 250

0 0 5 10 15

ALL DISTANCES ARE IN METRES

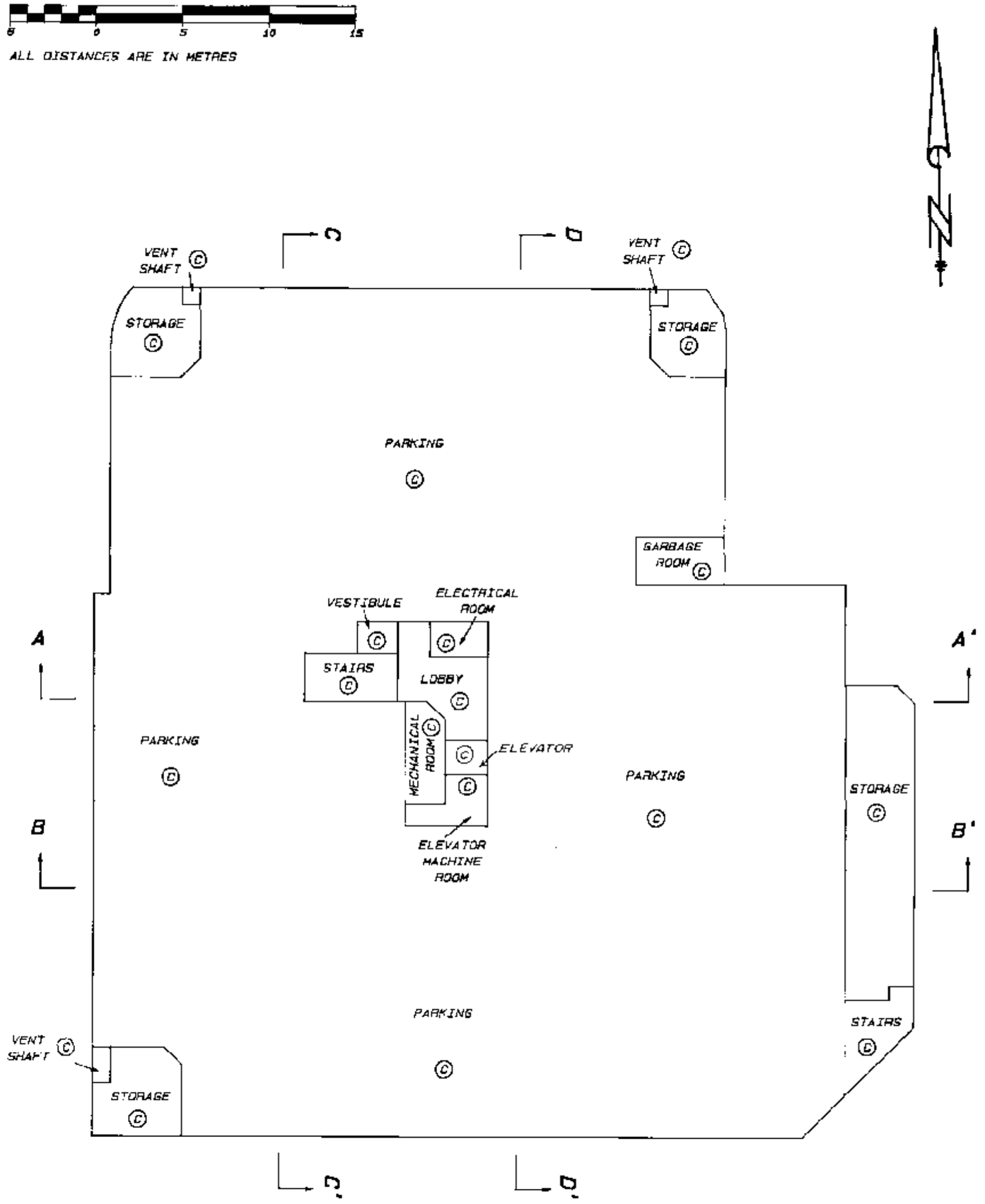

JUNE 14, 1994

FILED LMLMS1425 Y43507 2007-07-03-12.47.45.487196

BUILDING 2
FIRST FLOOR

FLOOR PLANS

STRATA PLAN LMS1425
PHASE 2

SCALE 1:250

5 0 5 10 15

ALL DISTANCES ARE IN METRES

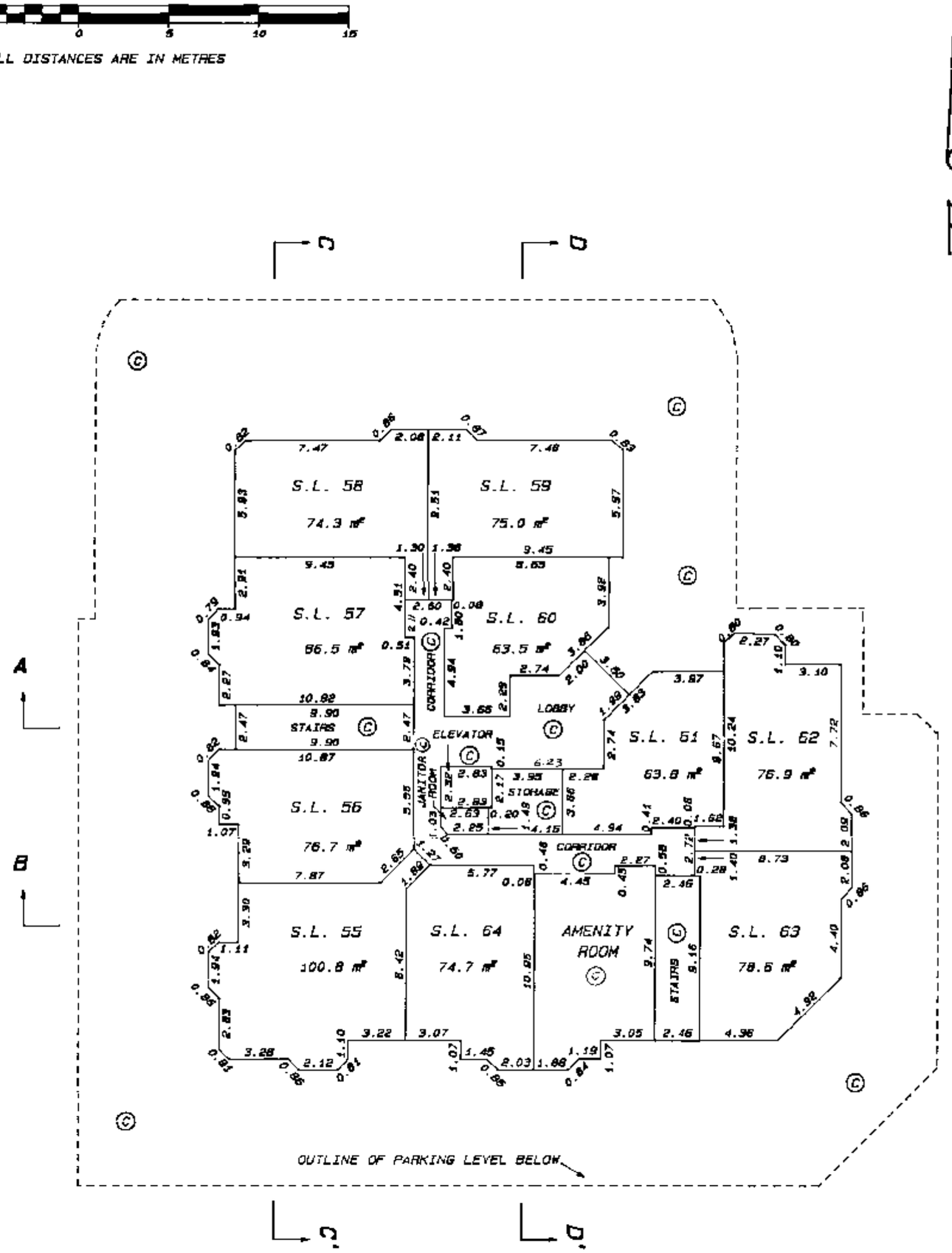

JUNE 14, 1994

FILED LMLMS1425 Y43507 2007-07-03-12.47.45.487196

BUILDING 2
SECOND FLOOR
FLOOR PLANS

STRATA PLAN LMS1425
PHASE 2

SCALE 1:250

5 0 5 10 15

ALL DISTANCES ARE IN METRES

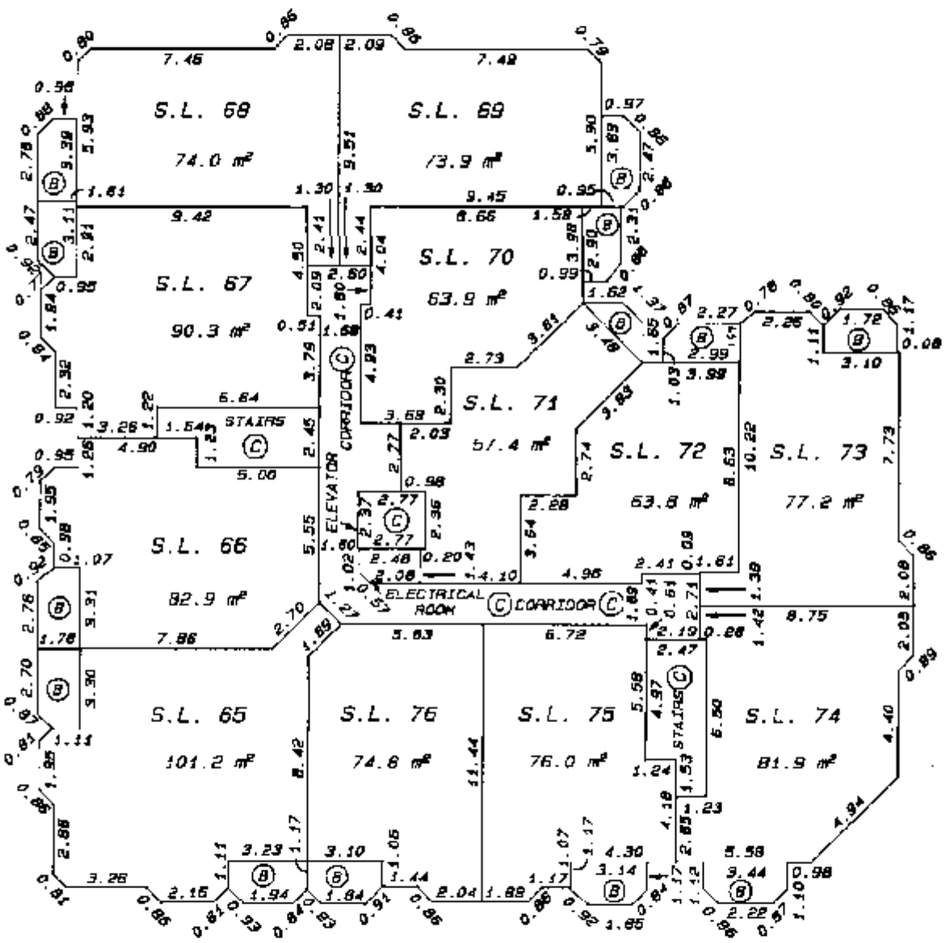

JUNE 14, 1994

FILED LMLMS1425 Y43507 2007-07-03-12.47.45.487196

BUILDING 2
THIRD FLOOR

FLOOR PLANS

STRATA PLAN LMS1425
PHASE 2

SCALE 1:250

5 0 5 10 15

ALL DISTANCES ARE IN METRES

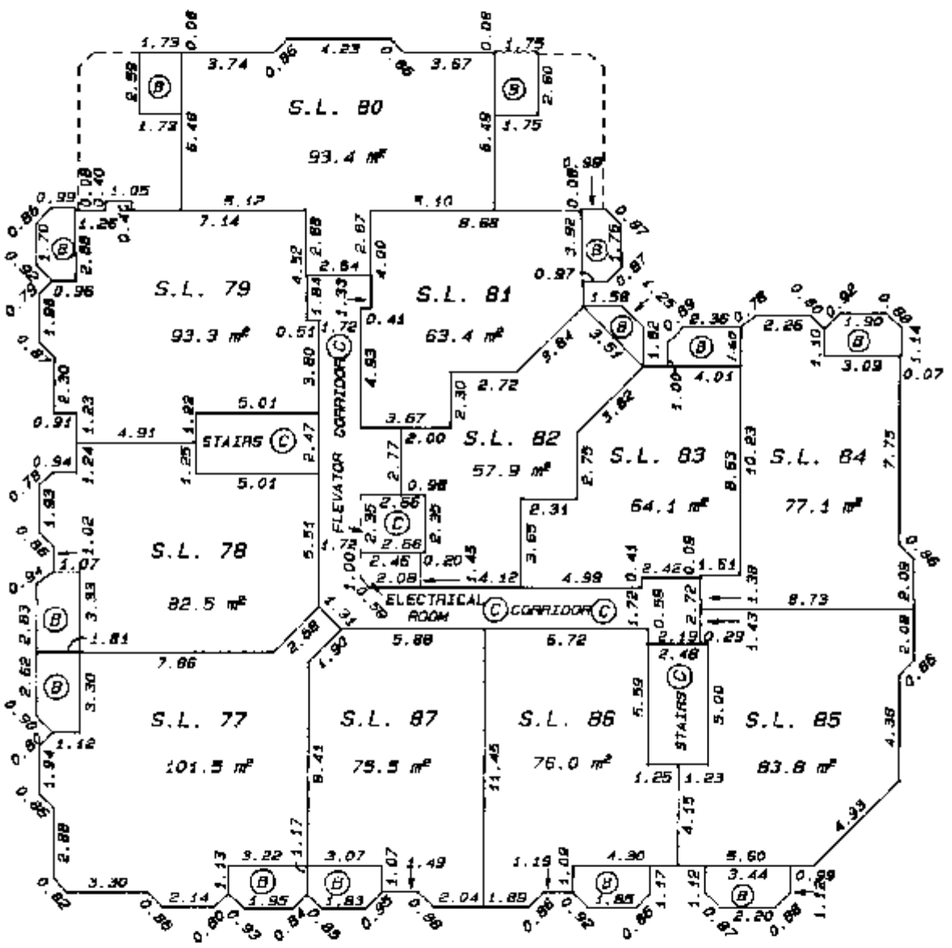

JUNE 14, 1994

FILED LMLMS1425 Y43507 2007-07-03-12.47.45.487196

BUILDING 2
FOURTH FLOOR

FLOOR PLANS

STRATA PLAN LMS1425
PHASE 2

SCALE 1: 250

5 0 5 10 15

ALL DISTANCES ARE IN METRES

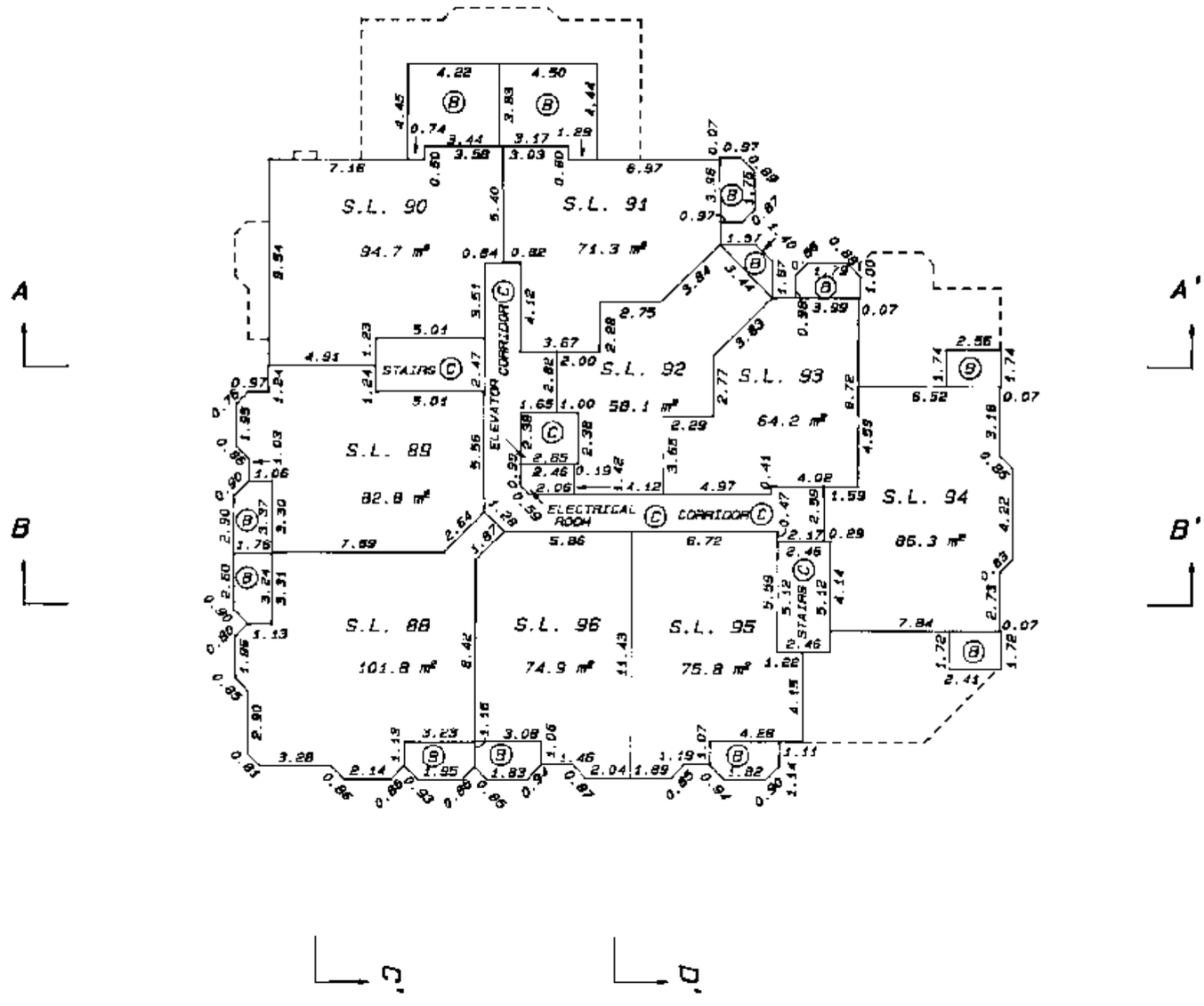

JUNE 14, 1994

FILED LMLMS1425 Y43507 2007-07-03-12.47.45.487196

BUILDING 2
SECTIONS

STRATA PLAN LMS1425
PHASE 2

SCALE 1: 250

5 0 5 10 15

ALL DISTANCES ARE IN METRES

SECTION A - A'

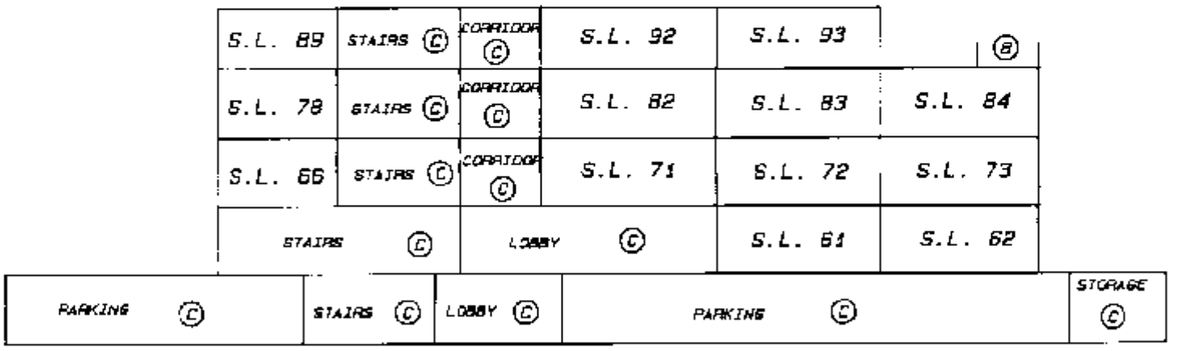

FOURTH FLOOR
THIRD FLOOR
SECOND FLOOR
FIRST FLOOR
PARKING LEVEL

SECTION B - B'

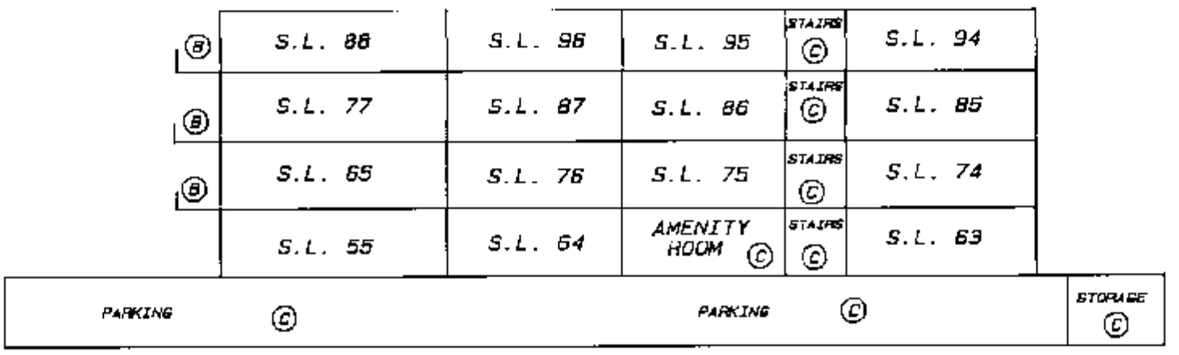

FOURTH FLOOR
THIRD FLOOR
SECOND FLOOR
FIRST FLOOR
PARKING LEVEL

SECTION C - C'

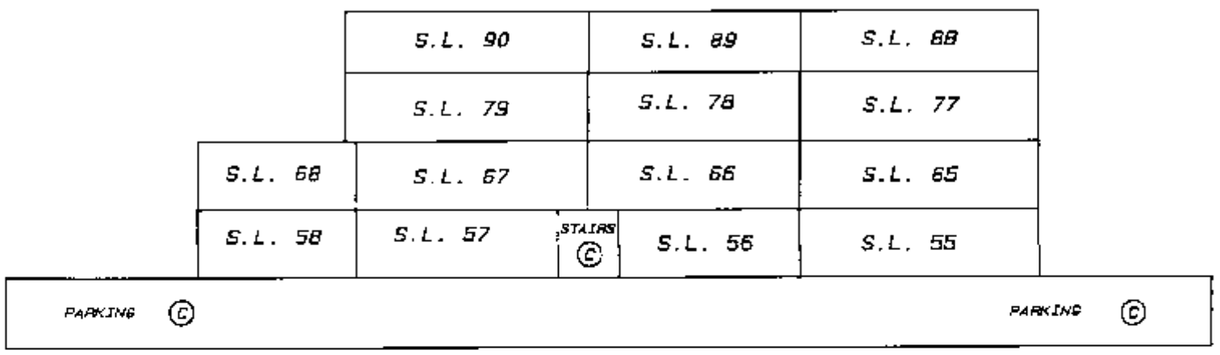

FOURTH FLOOR
THIRD FLOOR
SECOND FLOOR
FIRST FLOOR
PARKING LEVEL

SECTION D - D'

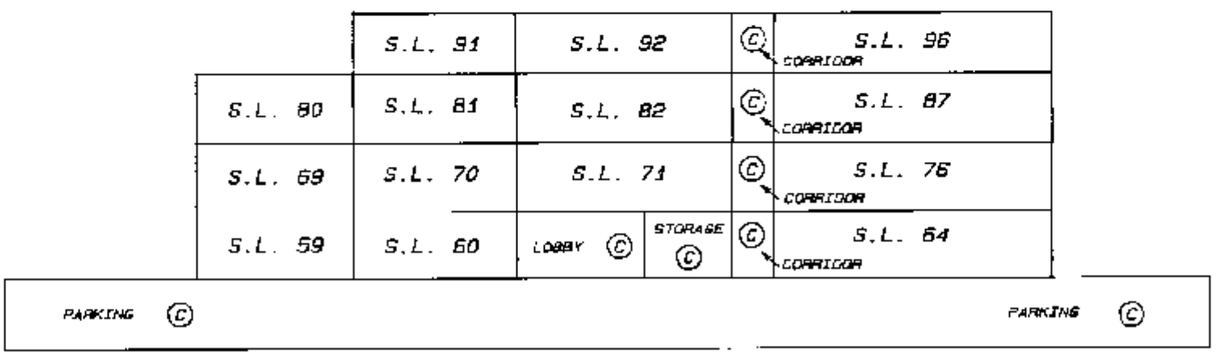

FOURTH FLOOR
THIRD FLOOR
SECOND FLOOR
FIRST FLOOR
PARKING LEVEL

JUNE 14, 1994

FILED LMLMS1425 Y43507 2007-07-03-12.47.45.487196

STRATA PLAN OF LOT A EXCEPT: PHASES 1 AND 2, STRATA PLAN LMS1425, SECTION 19, TOWNSHIP 2, N.W.D., PLAN NWP88367

FIRST SHEET, SHEET 1 OF 10 SHEETS

STRATA PLAN LMS1425
PHASE 3

DEPOSITED AND REGISTERED IN THE LAND TITLE OFFICE AT NEW WESTMINSTER, B.C., THIS 29 DAY OF AUG, 1994.

ASSISTANT DEPUTY REGISTRAR

REF. NO. BH318621

SCALE 1: 750

10 0 10 20 30 40

ALL DISTANCES ARE IN METRES

"CITY OF SURREY"

"LACOSTA GREEN"
12110 80TH AVENUE
SURREY, B.C.

120A STREET

INTEGRATED SURVEY AREA NO. 1
CITY OF SURREY

THIS PLAN SHOWS GROUND-LEVEL MEASURED DISTANCES. PRIOR TO COMPUTATION OF U.T.M. CO-ORDINATES MULTIPLY BY COMBINED FACTOR 0.9995969509

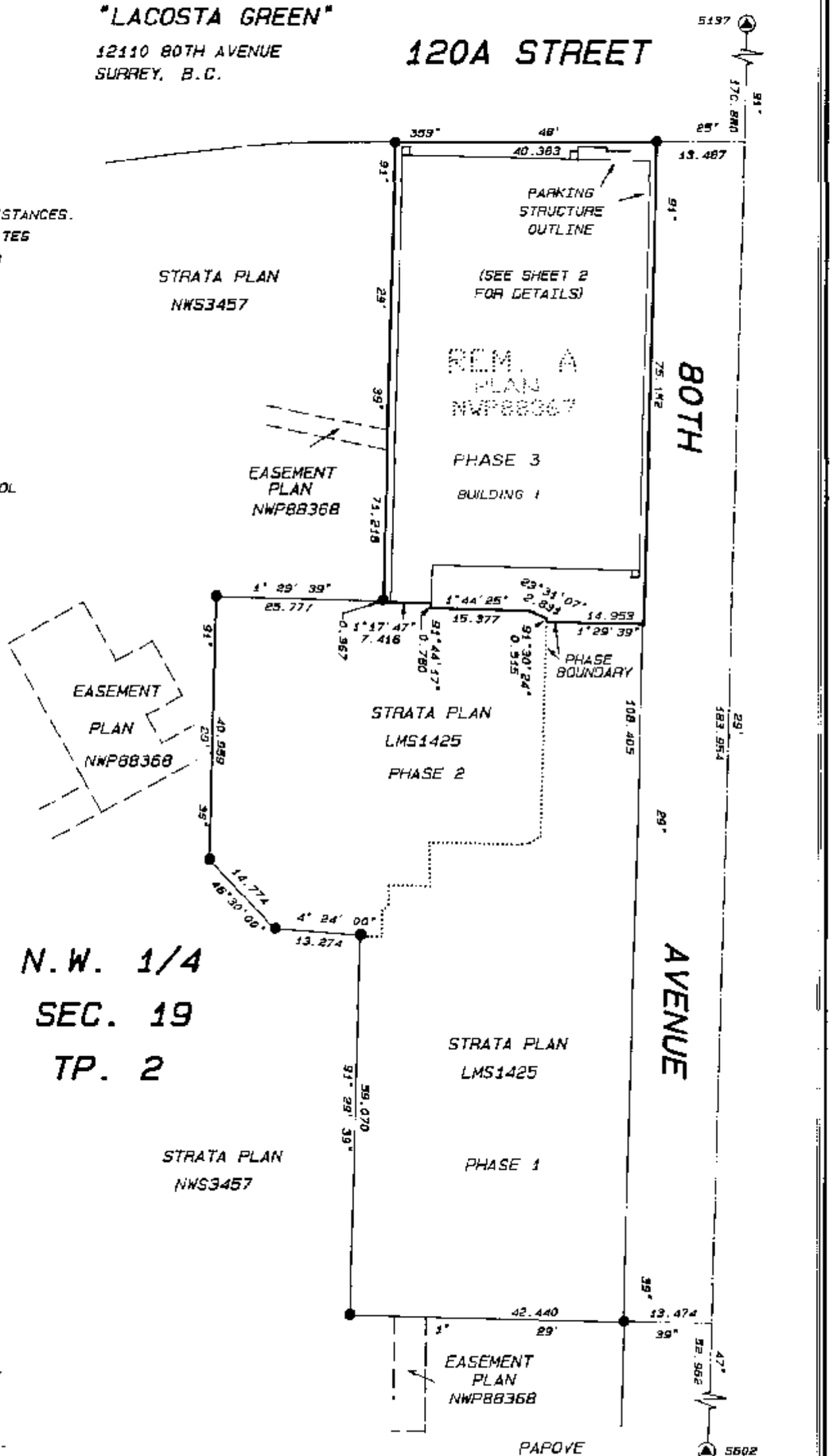

LEGEND

GRID BEARINGS ARE DERIVED FROM OLD CONTROL MONUMENTS 5137 AND 5602.

- ● DENOTES STANDARD IRON POST FOUND
- ▲ DENOTES CONTROL MONUMENT FOUND
- O/S DENOTES OFFSET TO PROPERTY LINE
- S.L. DENOTES STRATA LOT
- m² DENOTES SQUARE METRES
- (C) DENOTES COMMON PROPERTY
- (B) DENOTES BALCONY (ALL BALCONIES ARE COMMON PROPERTY)

THE ADDRESS FOR SERVICE OF DOCUMENTS OF THE STRATA CORPORATION IS:
THE OWNERS, STRATA PLAN LMS1425
#6-15243 31ST AVENUE
SURREY, B.C.
V3R 8P8

N.W. 1/4
SEC. 19
TP. 2

I, W. PAPOVE OF COQUITLAM A BRITISH COLUMBIA LAND SURVEYOR, HEREBY CERTIFY THAT THE BUILDING ERECTED ON THE PARCEL DESCRIBED ABOVE IS WHOLLY WITHIN THE EXTERNAL BOUNDARIES OF THAT PARCEL. DATED AT COQUITLAM, B.C. THIS 9TH DAY OF AUGUST, 1994

B.C.L.S.

THIS PLAN LIES WITHIN THE GREATER VANCOUVER REGIONAL DISTRICT

PAPOVE PROFESSIONAL LAND SURVEYING INC.
#202-1070 RIDGEWAY AVENUE
COQUITLAM, B.C. V3J 1S7
TEL. 936-3737 FAX. 936-6509
FILE NO. 3325P3

FILED LMLMS1425 Y43507 2007-07-03-12.47.45.487196

FILED LMLMS1425 Y43507 2007-07-03-12.47.45.487196

FIRST SHEET, SHEET 2 OF 10 SHEETS

BUILDING 1
BUILDING LOCATION

STRATA PLAN LMS1425
PHASE 3

SCALE 1:250

5 0 5 10 15

ALL DISTANCES ARE IN METRES

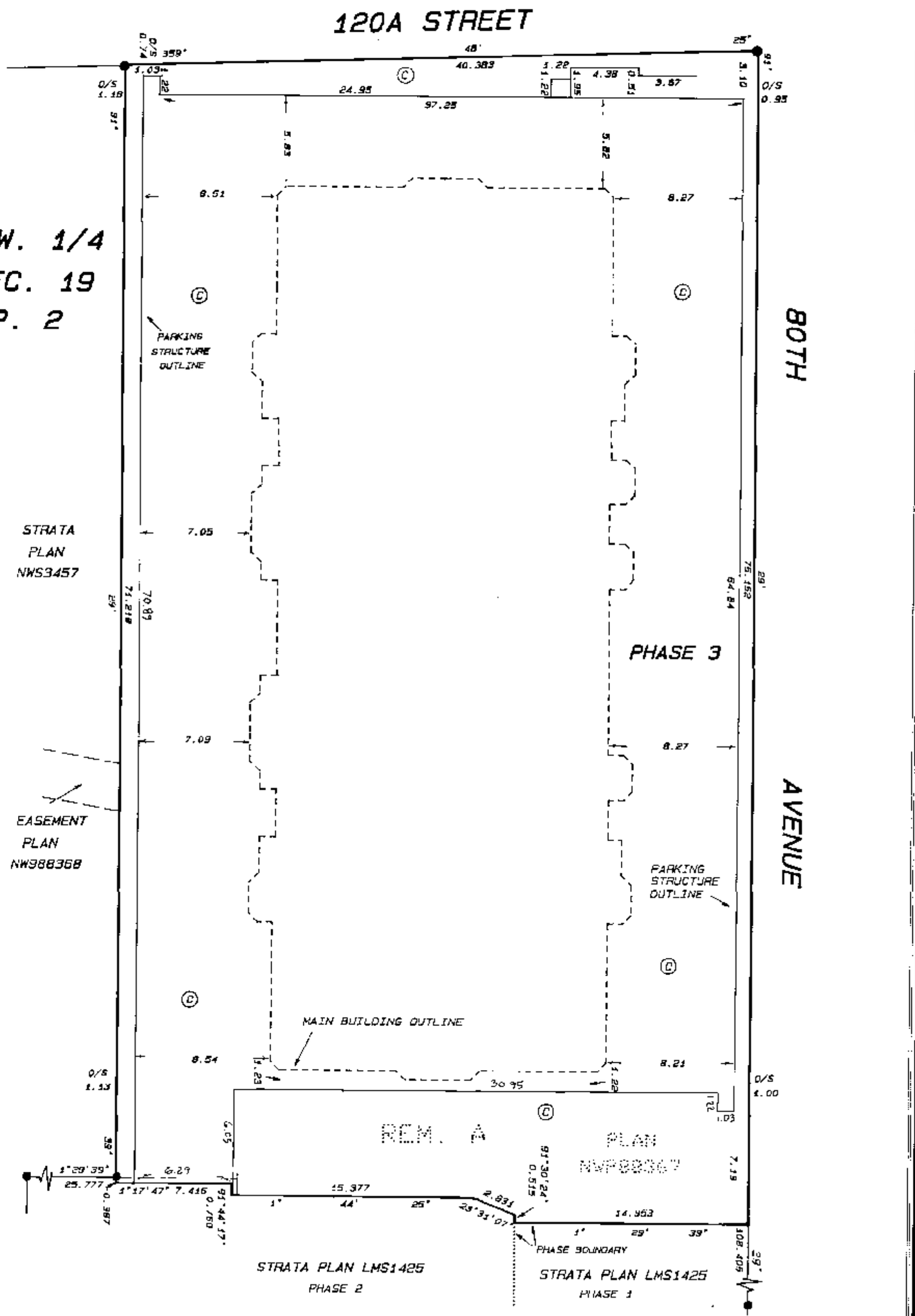

CONDOMINIUM ACT

STRATA PLAN LMS1425
PHASE 3

STRATA LOT	SHEET NUMBER	FORM 1	FORM 2
		SCHEDULE OF UNIT ENTITLEMENT	SCHEDULE OF INTEREST UPON DESTRUCTION
		UNIT ENTITLEMENT	INTEREST UPON DESTRUCTION
97	6 AND 10	736	110
98	6 AND 10	869	111
99	6 AND 10	572	89
100	6 AND 10	576	89
101	6 AND 10	568	89
102	6 AND 10	868	111
103	6 AND 10	740	110
104	6 AND 10	739	110
105	6 AND 10	871	108
106	6 AND 10	697	97
107	6 AND 10	699	97
108	6 AND 10	697	97
109	6 AND 10	972	113
110	6 AND 10	738	112
111	7 AND 10	740	111
112	7 AND 10	908	116
113	7 AND 10	632	95
114	7 AND 10	576	89
115	7 AND 10	507	89
116	7 AND 10	630	95
117	7 AND 10	907	116
118	7 AND 10	739	111
119	7 AND 10	739	111
120	7 AND 10	969	114
121	7 AND 10	598	98
122	7 AND 10	597	98
123	7 AND 10	597	98
124	7 AND 10	598	98
125	7 AND 10	969	114
126	7 AND 10	740	112
127	8 AND 10	924	128
128	8 AND 10	930	121
129	8 AND 10	636	96
130	8 AND 10	576	93
131	8 AND 10	507	89
132	8 AND 10	934	96
133	8 AND 10	928	121
134	8 AND 10	933	128
135	8 AND 10	876	118
136	8 AND 10	598	99
137	8 AND 10	598	99
138	8 AND 10	697	99
139	8 AND 10	597	99
140	8 AND 10	874	118
141	9 AND 10	915	132
142	9 AND 10	633	99
143	9 AND 10	574	95
144	9 AND 10	509	94
145	9 AND 10	631	99
146	9 AND 10	916	131
147	9 AND 10	699	104
148	9 AND 10	697	102
149	9 AND 10	698	102
150	9 AND 10	699	104
AGGREGATE PHASE 3		39469	5674
AGGREGATE PHASES 1, 2 AND 3		111771	15853

AUGUST 9, 1984

FILED LMLMS1425 Y43507 2007-07-03-12.47.45.487196

CONDOMINIUM ACT

STRATA PLAN LMS1425
PHASE 3

APPROVED AS TO PHASE 3 OF A 3 PHASE STRATA PLAN UNDER THE CONDOMINIUM ACT.
THIS 15th DAY OF August, 1994

APPROVING OFFICER FOR
THE CITY OF SURREY

LA COSTA PROJECTS LTD.
(INC. NO. 351872)

AUTHORIZED SIGNATORY
Hilar Belling

AUTHORIZED SIGNATORY

WITNESS A.H. SENYK
ANTHONY
2ND FLR. #7
19343 91ST AVE.
SURREY, B.C. V3R 8P8
ADDRESS OF WITNESS

OCCUPATION OF WITNESS

STATUTORY DECLARATION

I. THE UNDERSIGNED DO SOLEMNLY DECLARE THAT
(1) I, THE UNDERSIGNED AM THE DULY AUTHORIZED AGENT OF THE OWNER-DEVELOPER
(2) THE STRATA PLAN IS ENTIRELY FOR RESIDENTIAL USE.

I MAKE THIS SOLEMN DECLARATION CONSCIENTIOUSLY BELIEVING IT TO BE TRUE AND KNOWING THAT IT IS OF THE SAME FORCE AND EFFECT AS IF MADE UNDER OATH.

DECLARED BEFORE ME AT SURREY
IN THE PROVINCE OF BRITISH COLUMBIA
THIS 22nd DAY OF AUGUST, 1994.

A COMMISSIONER FOR TAKING AFFIDAVITS
WITHIN THE PROVINCE OF BRITISH COLUMBIA

NATIONAL TRUST COMPANY
(REG. NO. 141T)

AUTHORIZED SIGNATORY Connie GALLIFORD

AUTHORIZED SIGNATORY TRICIA MURPHY

WITNESS VAN BOT
1177 W. HASTINGS ST
VANCOUVER, BC
ADDRESS OF WITNESS

MANAGER, CLIENT SERVICES
OCCUPATION OF WITNESS

ACCEPTED AS TO FORMS 1 AND 2
THIS 25 DAY OF August 1994.

for: SUPERINTENDENT OF REAL ESTATE

THE TORONTO-DOMINION BANK

AUTHORIZED SIGNATORY Bruce M. Shirreff
SR. VICE PRESIDENT
MORTGAGES

AUTHORIZED SIGNATORY

WITNESS MTG. SERVICING OFCR.
55 KING ST. W., 22ND FL.
TD TOWER, TOR, ONT.
ADDRESS OF WITNESS LISA O'BRIEN

MTG. SERVICING OFCR.
OCCUPATION OF WITNESS

FILED LMLMS1425 Y43507 2007-07-03-12.47.45.487196

BUILDING 1
PARKING LEVEL
FLOOR PLAN

SCALE 1: 200

5 0 5 10

ALL DISTANCES ARE IN METRES

SHEET 5 OF 10 SHEETS

STRATA PLAN LMS1425
PHASE 3

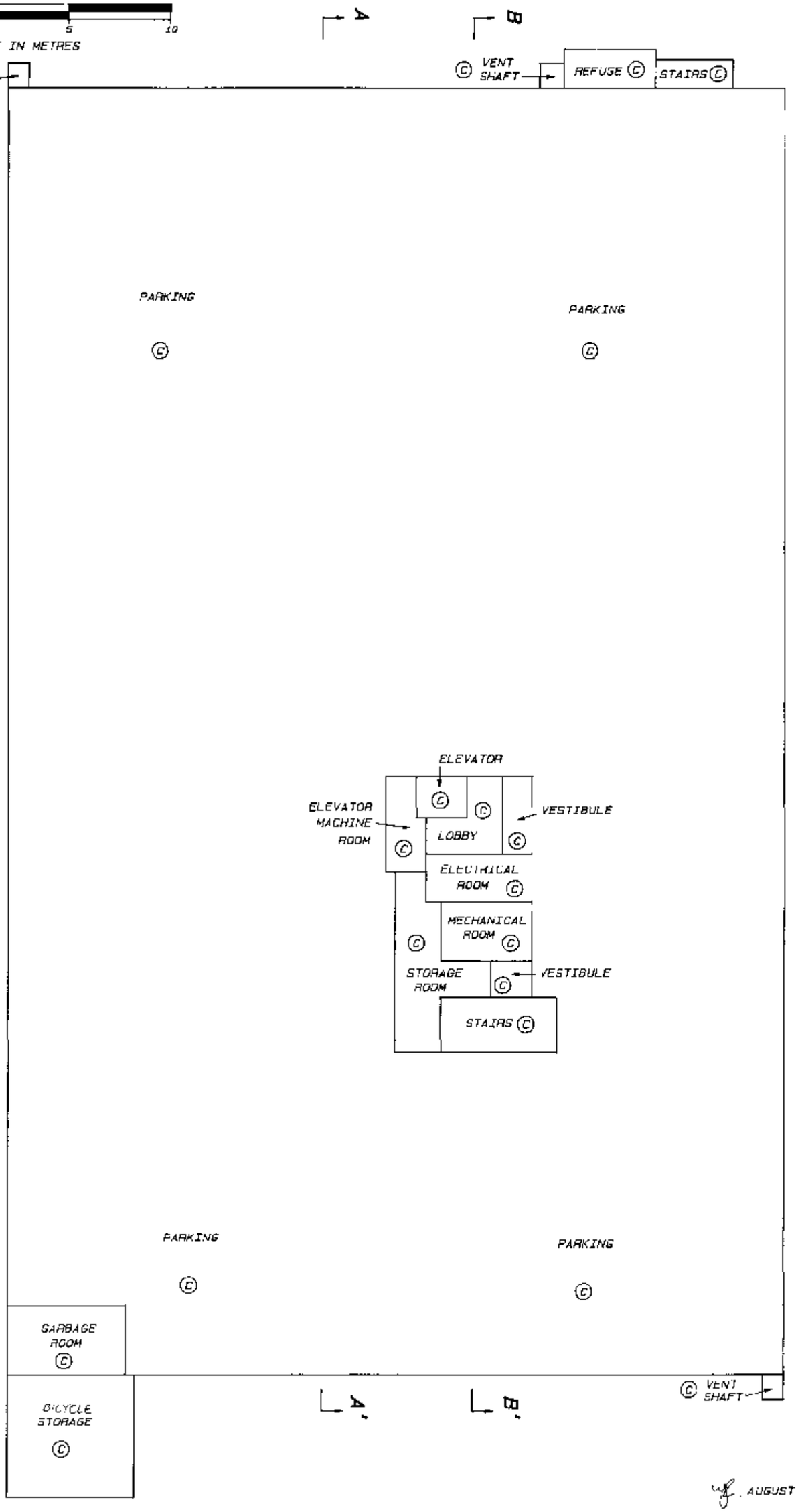

AUGUST 9, 1984

FILED LMLMS1425 Y43507 2007-07-03-12.47.45.487196

BUILDING 1
FIRST FLOOR
FLOOR PLANS

SCALE 1: 200

5 0 5 10

ALL DISTANCES ARE IN METRES

STRATA PLAN LMS1425
PHASE 3

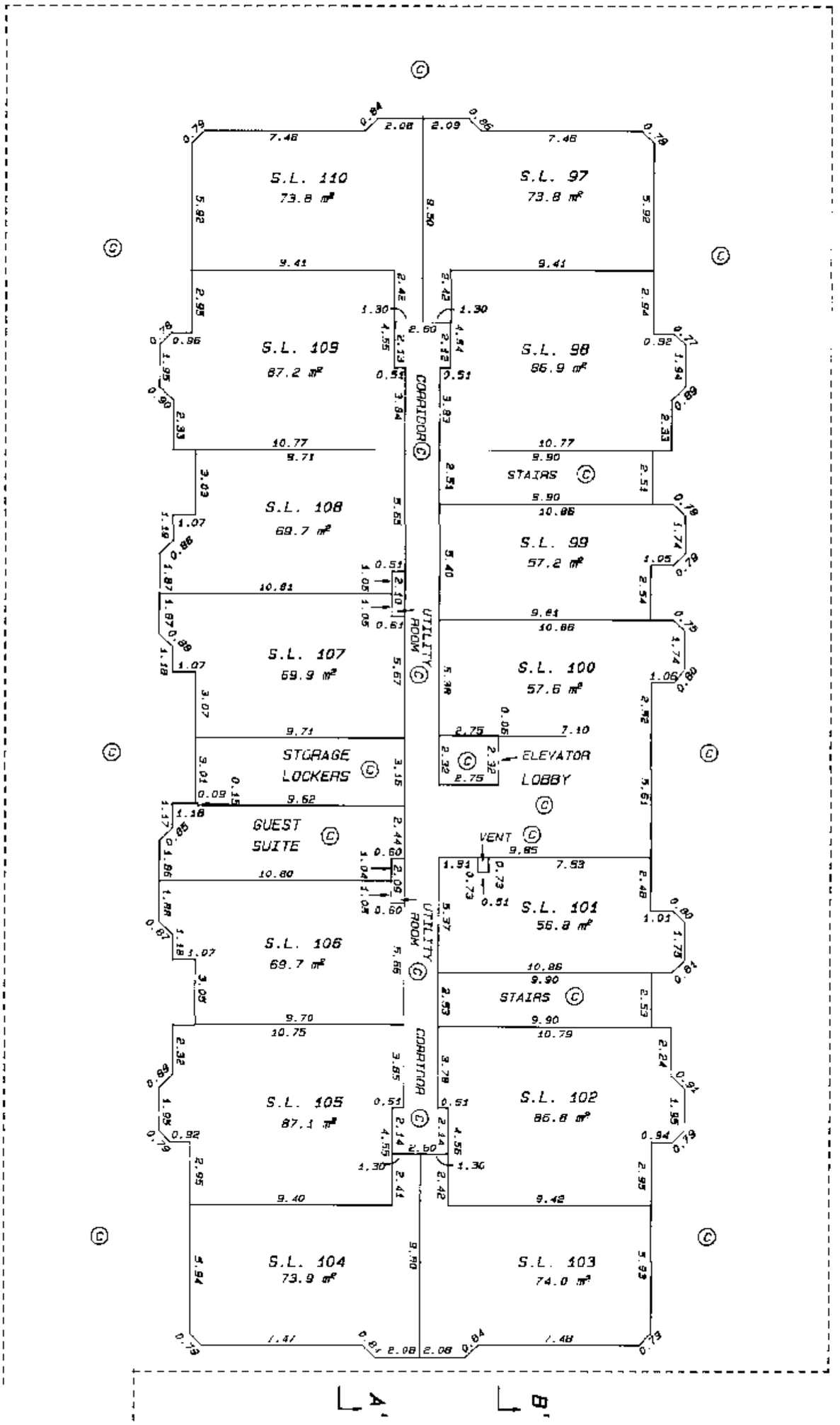

AUGUST 9, 1984

FILED LMLMS1425 Y43507 2007-07-03-12.47.45.487196

BUILDING 1
SECOND FLOOR
FLOOR PLANS

SCALE 1:200

5 0 5 10

ALL DISTANCES ARE IN METRES

STRATA PLAN LMS1425
PHASE 3

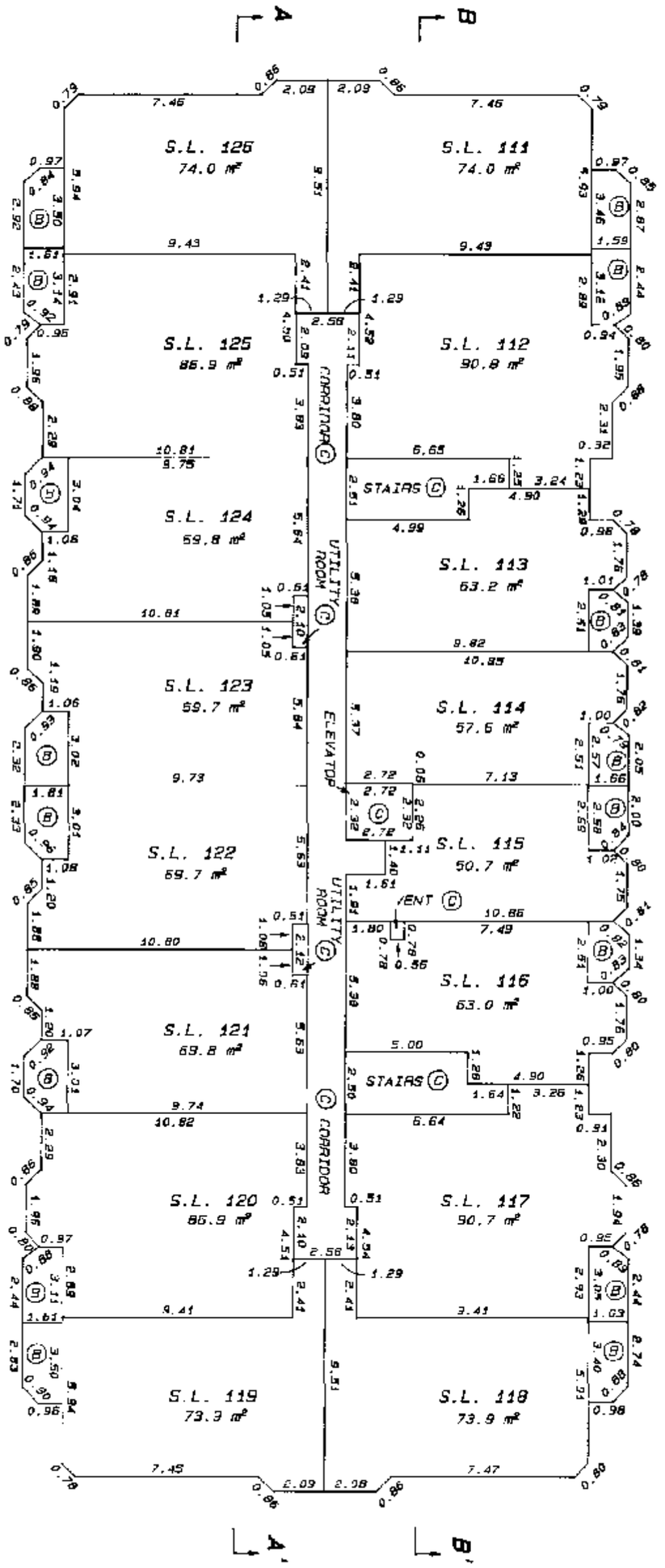

AUGUST 9, 1994

FILED LMLMS1425 Y43507 2007-07-03-12.47.45.487196

BUILDING 1
THIRD FLOOR
FLOOR PLANS

SCALE 1: 200

5 0 5 10

ALL DISTANCES ARE IN METRES

STRATA PLAN LMS1425
PHASE 3

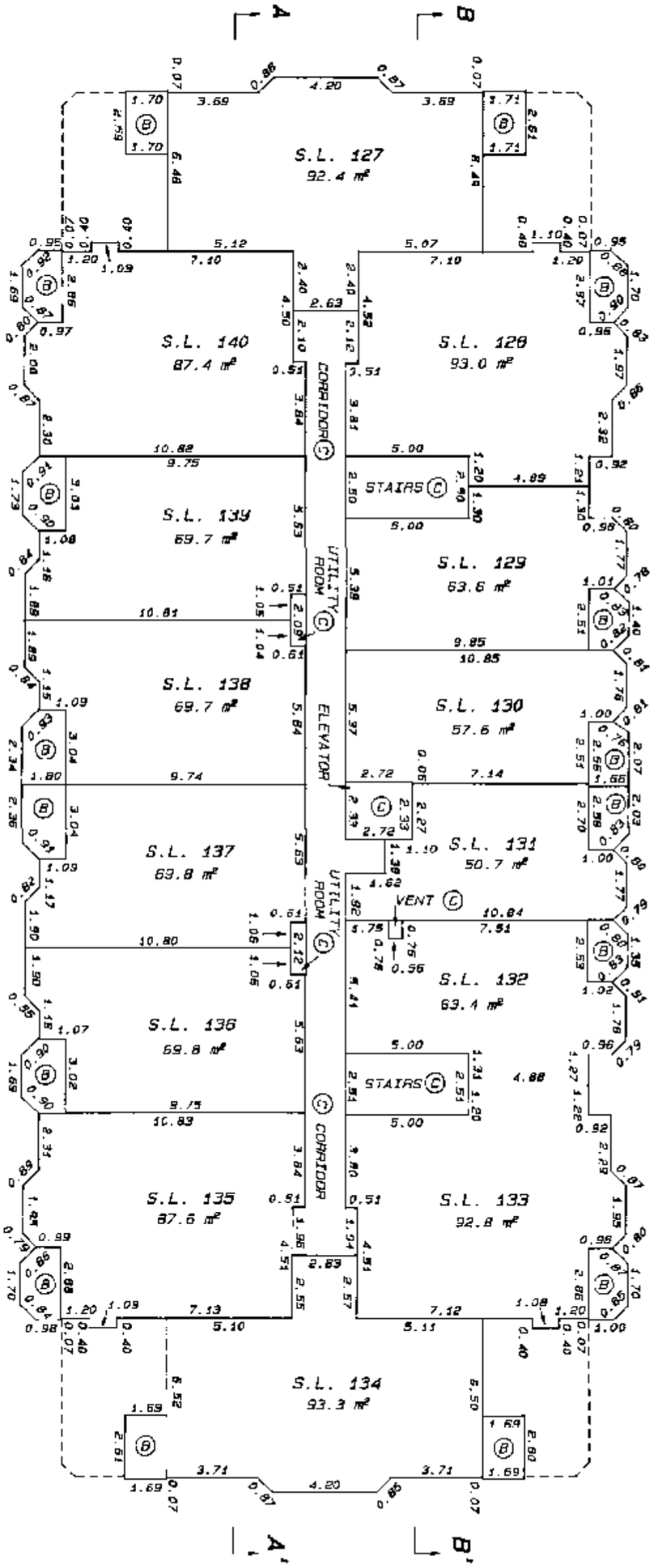

AUGUST 5, 1994

FILED LMLMS1425 Y43507 2007-07-03-12.47.45.487196

BUILDING 1
FOURTH FLOOR
FLOOR PLANS

SCALE 1:200

5 0 5 10

ALL DISTANCES ARE IN METRES

STRATA PLAN LMS1425
PHASE 3

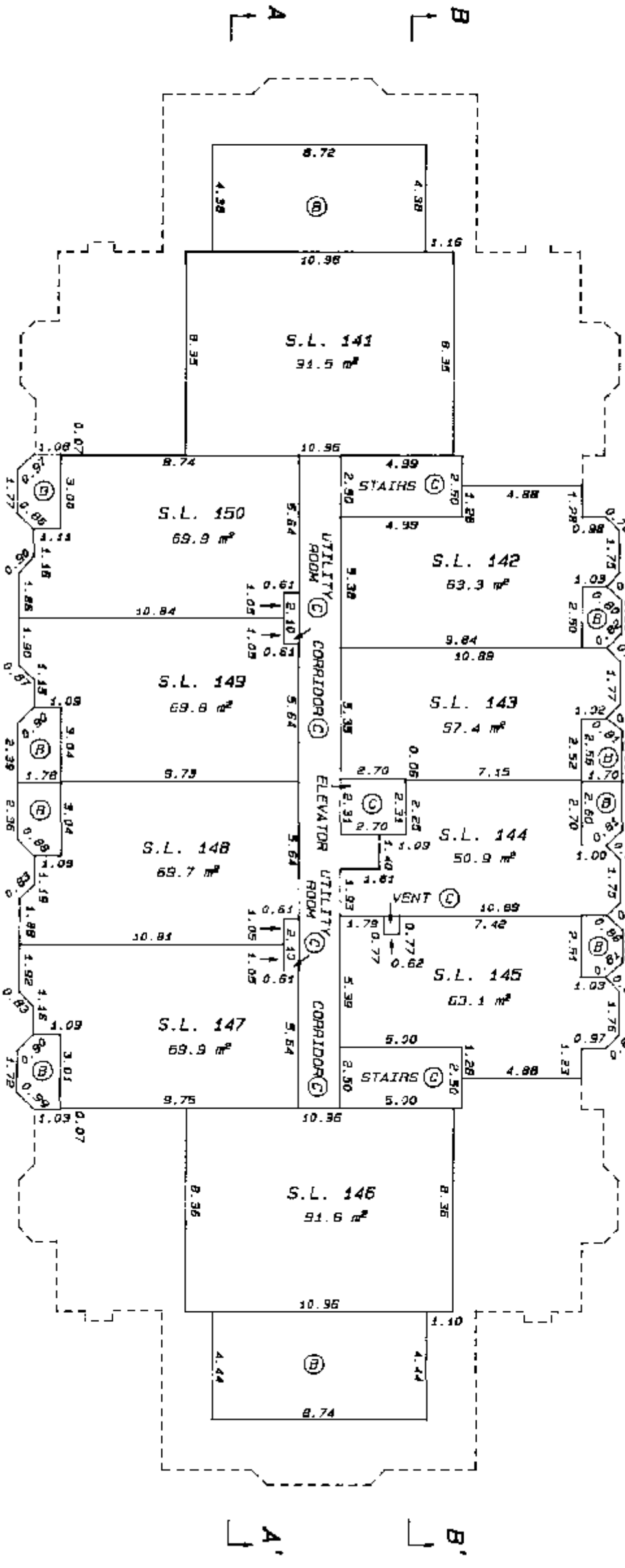

AUGUST 9, 1994

FILED LMLMS1425 Y43507 2007-07-03-12.47.45.487196

FILED LMLMS1425 Y43507 2007-07-03-12.47.45.487196

STRATA PLAN LMS1425
PHASE 3

BUILDING 1
SECTIONS

SCALE 1:200

ALL DISTANCES ARE IN METRES

SECTION A - A'

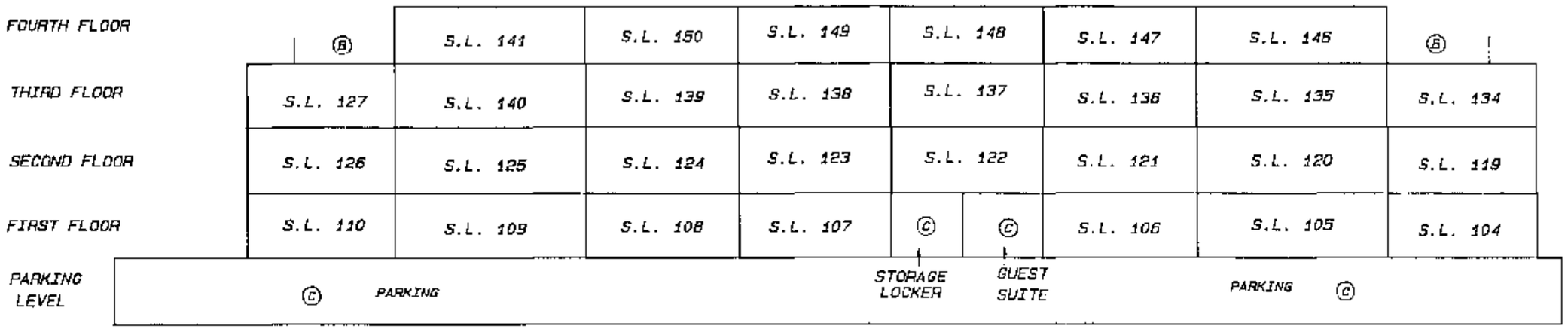

SECTION B - B'

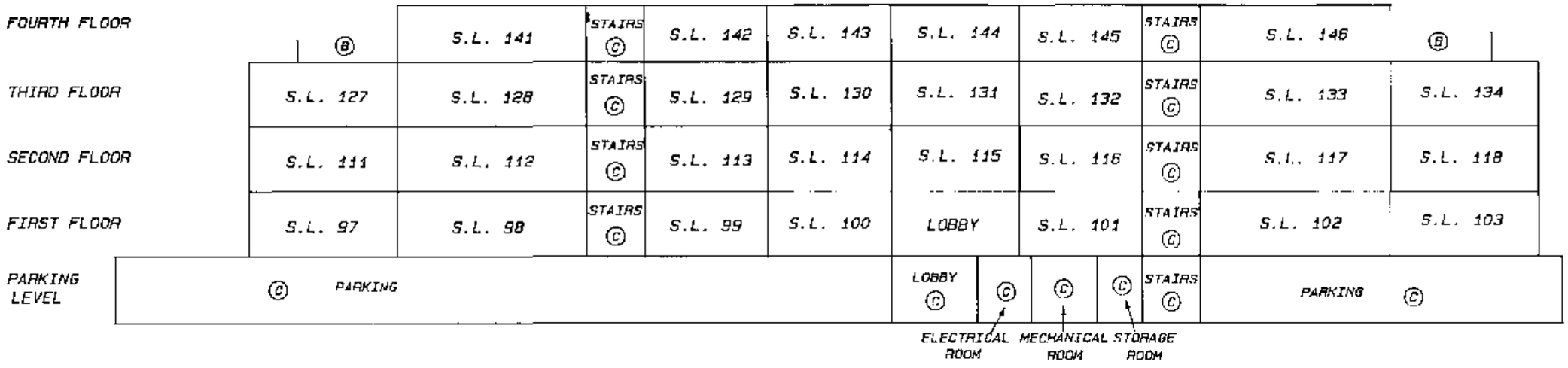

AUGUST 9, 1994